Serial No. _____

INSTRUCTION MANUAL

MODEL 147

HF SWEEP GENERATOR

WAVETEK

Box 651, San Diego, Calif., 714-279-2200

1R-10/73

WARRANTY

All Wavetek instruments are warranteed against defects in material and workmanship for a period of one year after date of manufacture. Wavetek agrees to repair or replace any assembly or component (except batteries) found to be defective, under normal use, during this period. Wavetek's obligation under this warranty is limited solely to repairing any such instrument which in Wavetek's sole opinion proves to be defective within the scope of the warranty when returned to the factory or to an authorized service center. Transportation to the factory or service center is to be prepaid by purchaser. Shipment should not be made without prior authorization by Wavetek.

This warranty does not apply to any products repaired or altered by persons not authorized by Wavetek, or not in accordance with instructions furnished by Wavetek. If the instrument is defective as a result of misuse, improper repair, or abnormal conditions or operations, repairs will be billed at cost.

Wavetek assumes no responsibility for its product being used in a hazardous or dangerous manner either alone or in conjunction with other equipment. High voltage used in some instruments may be dangerous if misused. Special disclaimers apply to these instruments. Wavetek assumes no liability for secondary charges or consequential damages and, in any event, Wavetek's liability for breach of warranty under any contract or otherwise, shall not exceed the purchase price of the specific instrument shipped and against which a claim is made.

Any recommendations made by Wavetek for use of its products are based upon tests believed to be reliable, but Wavetek makes no warranty of the results to be obtained. This warranty is in lieu of all other warranties, expressed or implied, and no representative or person is authorized to represent or assume for Wavetek any liability in connection with the sale of our products other than set forth herein.

CONTENTS

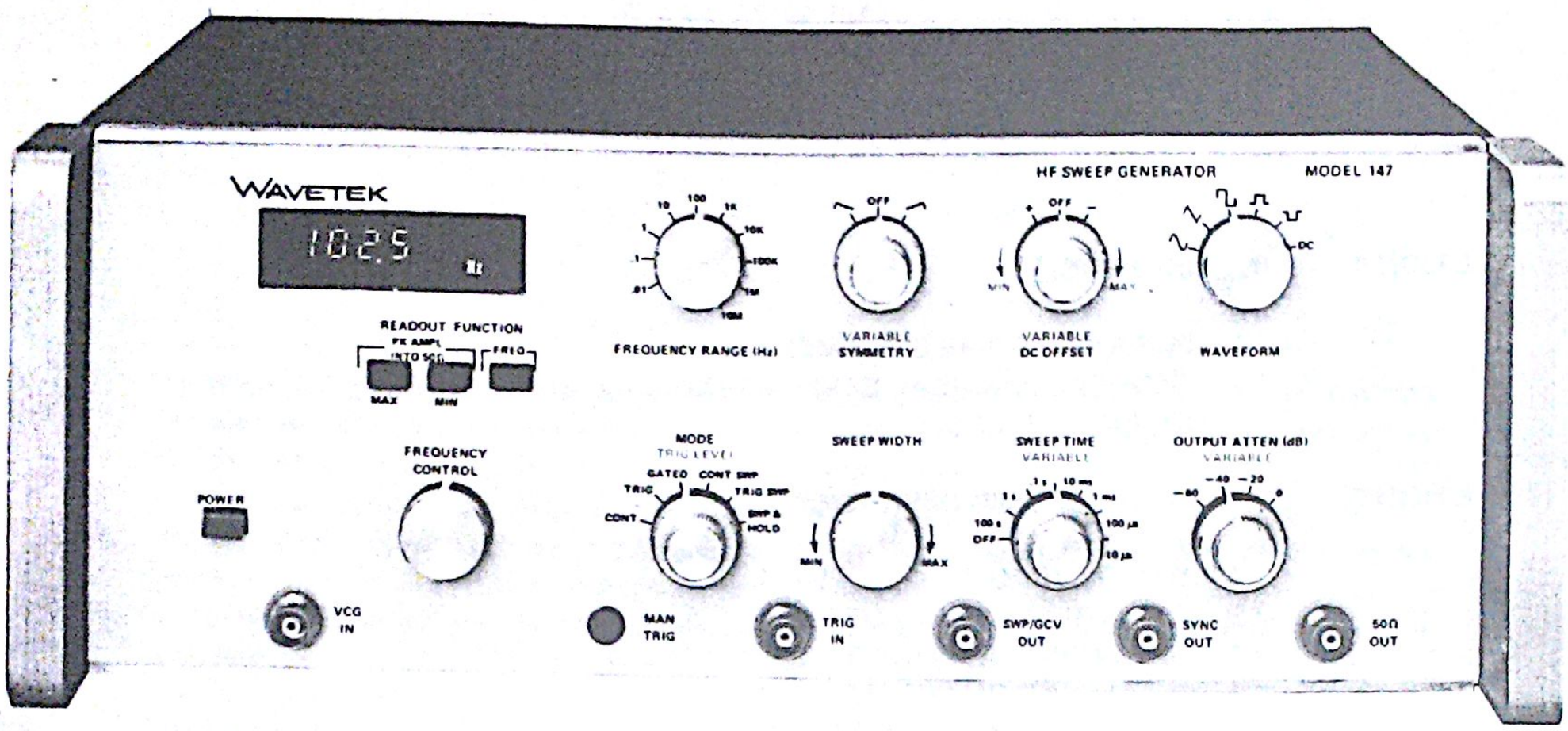

Figure i – Model 147 HF Sweep Generator

SCOPE OF THIS MANUAL

This manual provides descriptive material and instructions for the installation, operation, maintenance, and repair of this instrument. Wavetek's product improvement program ensures that the latest electronic developments are incorporated in all Wavetek instruments by the addition of circuit and component changes as rapidly as development and testing permit. Due to the time required to document and print instruction manuals, it is not always possible to incorporate the more recent changes in the released manual. In this case, data will be found on engineering change sheets at the rear of the manual. If no change sheets are included, the manual is correct as printed.

SECTION 1
INTRODUCTION

1.1 PURPOSE OF THE EQUIPMENT

The Model 147 HF Sweep Generator is a precision 0.0005 Hz to 10 MHz source of sine, triangle, square, positive pulse, and negative pulse waveforms, each with variable amplitude, dc offset, and symmetry. Frequency range selection is provided in 10 decades, with a 3½ digit LED readout and vernier control which permits accurate adjustment to the least significant digit of the readout. The 3½ digit readout is 3 digits plus a fourth (the most significant) digit of 0 or 1. DC voltage output is also selectable with an adjustable range of ±10 Vdc into an open circuit (±5 Vdc into 50Ω) with 150 mA short circuit current.

Maximum output amplitude is 30 V p-p into an open circuit (15 V p-p into 50Ω) with a 60 dB calibrated step attenuator and a 20 dB vernier attenuator (80 dB overall) allowing signal levels as low as 1.5 mV p-p. Both the output waveform and the dc offset are attenuated by the 60 dB calibrated step attenuator. Maximum and minimum output peak voltages are displayed on the 3½ digit LED readout and are accurate to the specification when the output has been properly terminated with 50Ω load.

The Model 147 has six operational modes (continuous, triggered, gated, continuous sweep, triggered sweep, and sweep and hold) plus tone burst capability. The main output can be internally swept over approximately a 1000:1 ratio at sweep times from 10 μs to 100 s, or it can be frequency modulated, dc programmed, or externally swept over a greater than 1000:1 ratio by applying an external control signal to the front panel VCG IN connector. A single cycle of output, or one full sweep of the output, can be obtained by manual trigger or an external trigger signal applied to the front panel TRIG IN connector.

In addition to the 50Ω main output and sync output, the Model 147 also has sweep and generator control voltage (GCV) outputs. When the main output is not internally swept (i.e., operating in continuous, triggered, or gated modes without sweeping), the fixed amplitude sawtooth output of the internal sweep generator appears at the SWP/GCV OUT connector. When the main output is internally swept, an output voltage proportional to the instantaneous frequency of the main generator will appear at the SWP/GCV OUT connector. This GCV output can be used to drive X-Y recorders or the vertical and horizontal deflection circuits of oscilloscopes, video monitors, etc.

Varying the triangle symmetry produces a sawtooth signal with a rise or fall time as fast as 50 ns at a recurring rate of up to 1 MHz. Pulse outputs as narrow as 50 ns (duty cycles from 19:1 to 1:19) with repetition rates as high as 1 MHz can be generated in either polarity. Even the sine wave symmetry may be varied over this 1:19 to 19:1 range if desired. When the output symmetry is not 1:1, the frequency range setting is divided by approximately 10; however, the actual output frequency is displayed on the LED readout.

With this instrument it is possible to internally or externally sweep the output frequency, select the output symmetry desired, and manually vary the dc offset. The output frequency, positive peak amplitude and negative peak amplitude are displayed on a digital readout. DC offset or dc output voltage can be set by digital readout. These capabilities coupled with the variety of waveforms available and precision output amplitude control make the Model 147 an extremely versatile instrument.

1.2 GENERAL PHYSICAL DESCRIPTION

The Model 147 weighs approximately 12 lb (5.45 kg) net and 16 lb (7.26 kg) when shipped. It is 14½ in. (368 mm) wide, 5¼ in. (133 mm) high, and 14¼ in. (362 mm) deep, and is housed in a compact, ruggedized, portable case. The Model 147 is normally shipped with a 10 foot, 3 wire, detachable line cord and one copy of this instruction manual.

1.3 SPECIFICATIONS

1.3.1 Waveforms

Waveforms that may be selected are sine ∿, square ⊓, triangle ∧∨, positive pulse ⎍ and negative pulse ⎍. DC voltage may also be selected. Symmetry of all outputs are continuously adjustable from 1:19 to 19:1. Varying the triangle symmetry produces sawtooth /\ or /\ output. The Model 147 has a SWP/GCV OUTput and a SYNC OUTput with variable symmetry as described below. Signal frequency and maximum and minimum peak signal voltages are indicated by a 3½ digit LED readout.

1.3.2 Operating Frequency Range

The FREQUENCY RANGE (Hz) switch selects from 0.0005 Hz to 10 MHz in the following ranges:

0.01	0.0005 Hz to 0.01 Hz
0.1	0.005 Hz to 0.1 Hz
1	0.05 Hz to 1 Hz
10	0.1 Hz to 10 Hz
100	1 Hz to 100 Hz
1K	10 Hz to 1 kHz
10K	100 Hz to 10 kHz
100K	1 kHz to 100 kHz
1M	10 kHz to 1 MHz
10M	100 kHz to 10 MHz

The FREQUENCY CONTROL adjusts the frequency to the least significant digit of the readout.

1.3.3 Main Output

The 50Ω OUT is the output for the selectable waveform and dc voltage output. Maximum output is 30 V p-p into an open circuit; 15 V p-p into 50Ω. There is a precision output attenuator calibrated in 20 dB steps to −60 dB with an overlapping vernier for an overall attenuation of −80 dB. Output impedance is 50Ω. Short circuit current is 150 mA.

1.3.4 Sync Output

The SYNC OUT connector provides TTL compatible output level sync signal. Rise and fall times are less than 50 ns. The sync signal is a square waveform for symmetrical outputs and rectangular for asymmetrical outputs. Sync pulse polarity is 180° out of phase with the selectable output square wave and 90° out of phase with the sine and triangle waveforms.

1.3.5 DC Offset and DC Output

DC offset and dc output are controlled manually by a front panel control. The adjustable range is ±10 Vdc into an open circuit (±5 Vdc into 50Ω) with peak signal and offset amplitude limited to ±15 Vdc into an open circuit (±7.5 Vdc into 50Ω). Display will flash when peak amplitude plus offset exceeds generator limits. DC offset and output waveform are attenuated proportionately by the 60 dB step output attenuator.

1.3.6 Sweep/GCV Output

Sweep output is a 0 to nominal +5 V sawtooth when in continuous, triggered or gated mode, and runs at a frequency determined by the SWEEP TIME control. GCV (Generator Control Voltage) output is a 0 to nominal +5 V signal proportional to the instantaneous frequency output. This GCV signal is present when the Model 147 is in any of the sweep modes.

1.3.7 Operational Modes

Continuous (CONT)

The Model 147 operates as a standard VCG (Voltage Controlled Generator). Frequency at the 50Ω OUT connector is determined by front panel control settings in conjunction with the VCG input signal. Output of the internal sweep generator appears at the SWP/GCV OUT connector in this mode.

Triggered (TRIG)

Only one complete cycle of output appears at the 50Ω OUT connector for each pulse applied to the TRIG IN connector or push of the MAN TRIG control. The cycle begins and ends at zero phase angle, which is zero volt or the offset base line voltage level. At least 1 V peak (and up to 50 V peak) is required for the trigger signal. TRIG IN is 10 kΩ, dc coupled.

GATED

Gated mode is the same as triggered mode except that output oscillations continue for the duration of the gating signal applied to the TRIG IN connector or push of the manual trigger. The output will be an integral number of cycles beginning and ending at zero phase angle, which is approximately zero volt.

Continuous Sweep (CONT SWP)

In continuous sweep, the main generator is swept by the internal sweep generator so that the signal frequency at the 50Ω OUT connector is swept from a low frequency established by the front panel frequency controls to a high frequency determined by the SWEEP WIDTH control setting. Sweep width can be up to approximately 1000:1. Sweep rate, determined by the SWEEP TIME control, is 10 μs to 100 s. GCV appears at the SWP/GCV connector.

Triggered Sweep (TRIG SWP)

Triggered sweep is the same as continuous sweep mode except that the output is swept only once for each pulse applied to the TRIG IN connector. During the time between sweeps, the main generator oscillates at a low frequency determined by the FREQUENCY CONTROL settings.

Sweep and Hold (SWP & HOLD)

In this mode, a gate signal at the TRIG IN connector causes the Model 147 to begin a frequency sweep. After sweeping to the high frequency (set by the SWEEP WIDTH control), the output holds at the high frequency as long as the gate signal is present. When the gate signal drops, the output returns to the frequency set by the front panel frequency controls.

Tone Burst

A tone burst can be accomplished in the gated mode by connecting the ramp output of the SWP/GCV OUT to TRIG IN. Tone burst rate, frequency and duration can be independently controlled.

1.3.8 Voltage Controlled Generator

VCG Control Range

The generator frequency can be controlled by an external voltage; e.g., five volts can vary the frequency 1000:1. Restrictions for linear operation are: frequency range selection is the upper frequency and the lower frequency is 1000 times below the frequency range selection; the required external signal for full voltage control is ±5 V. Either restriction may be exceeded for nonlinear operation, but operation is not specified. Input impedance is 5 kΩ.

VCG Input Frequency

VCG Bandwidth	100 kHz
VCG Slew Rate	2% of range per μs

VCG Linearity

10 Hz to 100 kHz	±0.2%
0.001 Hz to 1 MHz	±0.5%

1.3.9 Horizontal Precision

Frequency Readout Accuracy

0.01 Hz to 10 kHz	±(0.3% of range ±1 digit)
10 kHz to 10 MHz	±(0.2% of range ±1 digit)

Time Symmetry

10 Hz to 100 kHz	±0.5%
0.01 Hz to 500 kHz	±1.0%

1.3.10 Vertical Precision

Amplitude Readout Accuracy

1 Hz to 100 kHz	±(3% of full output ±1 digit)
100 kHz to 10 MHz . . .	±(5% of full output ±1 digit)

Sine Wave Frequency Response

Amplitude change with frequency is less than:

0.1 dB to 100 kHz
0.2 dB to 1 MHz
2.0 dB to 10 MHz

Step Attenuator Accuracy

±0.25 dB per 20 dB step

Stability

Short Term	±0.05% for 10 minutes
Long Term	±0.25% for 24 hours

Percentages apply to amplitude, frequency, and dc offset.

Amplitude Symmetry

All waveforms (except pulse) are symmetrical about ground within ±1% of maximum peak to peak amplitude.

1.3.11 Purity

Sine Wave Distortion

10 Hz to 100 kHz . .	Less than 0.5% (typically 0.25%)
100 kHz to 1 MHz	Less than 1.0%
1 MHz to 10 MHz .	All harmonics are at least 28 dB down

Triangle Linearity

0.0005 Hz to 100 kHz	Greater than 99%

Square Wave Rise and Fall Time

Less than 30 ns when terminated in 50Ω load.

Total Aberrations

Less than 5%.

1.3.12 Environmental

Temperature

All specifications listed, except for stability, are for 25°C ±5°C. For operation from 0°C to 55°C, derate all specifications by a factor of 2.

1.3.13 Mechanical

Dimensions

14½ in. (368 mm) wide; 5¼ in. (133 mm) high; 14¼ in. (362 mm) deep.

Weight

12 lb (5.45 kg) net; 16 lb (7.26 kg) shipping.

Power

90 to 110 V, 105 to 125 V, 180 to 220 V or 210 to 250 V; 50 to 400 Hz switchable; less than 50 watts.

SECTION 2
INSTALLATION AND OPERATION

2.1 MECHANICAL INSTALLATION

After unpacking the instrument, visually inspect all external parts for possible damage to knobs, connectors, surface areas, etc. If damage is discovered, file a claim with the carrier who transported the unit. The shipping container and packing material should be saved in case reshipment is required.

2.2 ELECTRICAL INSTALLATION

2.2.1 Power Connection

Connect the ac line cord to the mating connector at the rear of the unit.

NOTE

Unless otherwise specified at the time of purchase, this instrument was shipped from the factory with the power transformer connected for operation on a 105 - 125 Vac line supply and with 1/2 amp, 115 V line fuse.

Conversion for 90 to 110 V, 180 to 220 V or 210 to 250 V operation requires resetting two switches on the inside of the rear panel. To reset the switches, unscrew the four captive screws securing the rear panel, and remove the rear panel. Set the two switches and select the fuse for the ac line voltage according to the following table.

AC Line Voltage	Switch A	Switch B	Fuse (SB)
90 - 110	115	LO	½ amp
105 - 125	115	HI	½ amp
180 - 220	230	LO	¼ amp
210 - 250	230	HI	¼ amp

2.2.2 Signal Connections

Use 50Ω shielded cables equipped with female BNC connectors to distribute all signals when connecting this instrument to associated equipment.

2.3 OPERATING CONTROLS

The operating controls and electrical connections for the Model 147 are shown in Figure 2-1. The listing below discusses each control and its function.

1. **POWER Switch** – Power is on when this push button switch is in, and off when extended.

2. **READOUT FUNCTION FREQ Push Button** – When this push button is depressed, it causes the signal frequency at the 50Ω output to be displayed.

3. **READOUT FUNCTION PK AMPL, MAX/MIN Push Buttons** – MAX push button, when depressed, causes the maximum peak signal voltage to be displayed; MIN causes the minimum peak voltage to be displayed.

4. **Display and Readout Functions** – A fully automatic, direct reading display of the generator frequency and peak voltage outputs. When PK AMPL MAX or MIN push button is depressed, maximum or minimum peak voltage, respectively, is displayed. When the FREQ push button is depressed, the frequency is displayed. This is a 3½ digit display with sign, decimal point, and unit of measure. The decimal point is automatically positioned and the correct unit of measure automatically displayed. The three least significant digits each can be 0 through 9 while a fourth digit, the most significant, can be 0 or 1 only. The display is updated three times a second. The voltmeter is updated once every cycle.

NOTE

A. Display voltage is output voltage when the 50Ω output connector is properly terminated with a 50Ω load.

B. For operation in the 0.01 Hz or 0.1 Hz range, amplitude display is instantaneous voltage value in a tracking mode rather than peak voltage. To set peak amplitudes, select a higher frequency range, set the peaks, then

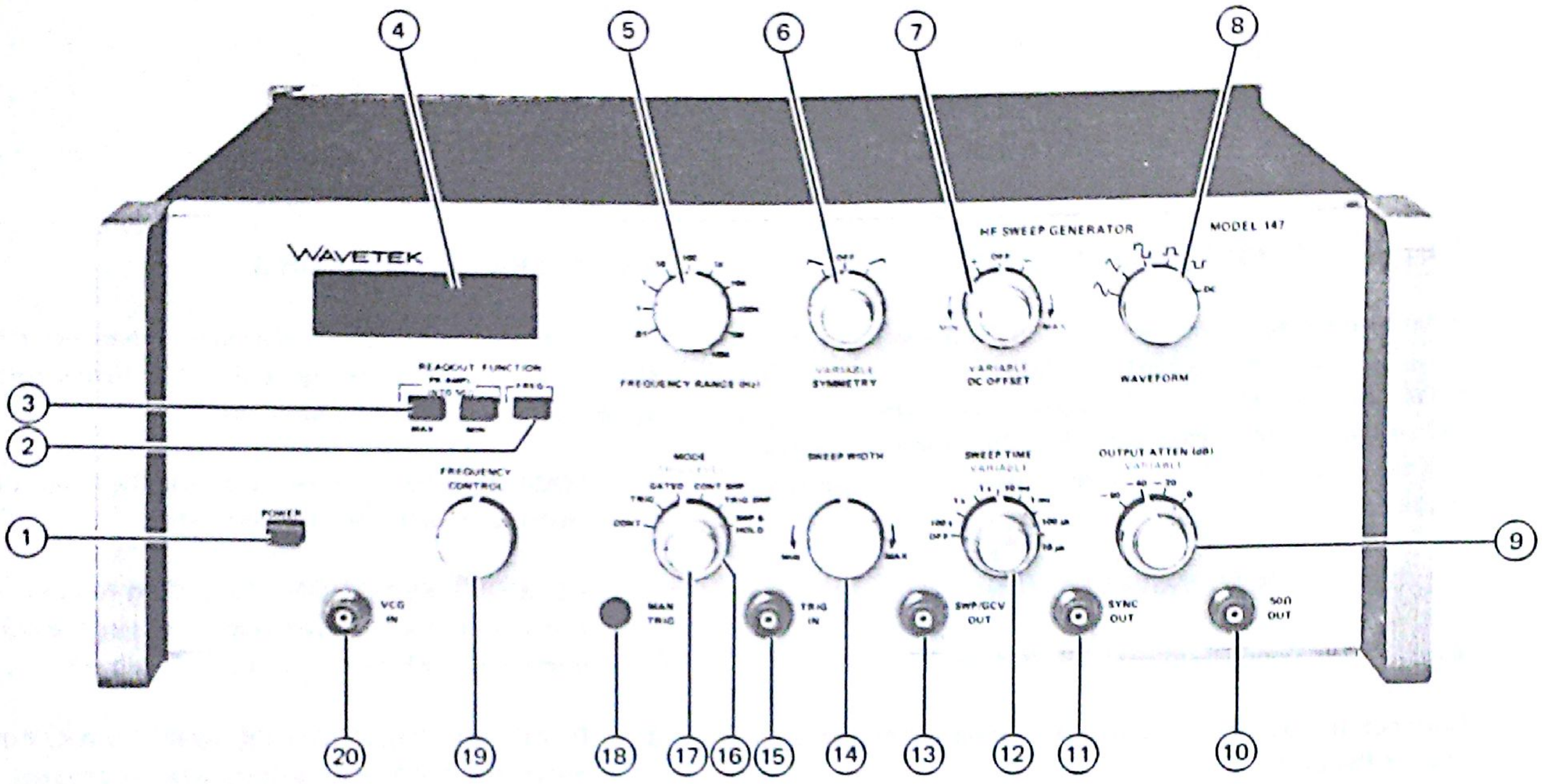

Figure 2-1. Operating Controls

return to the lower frequency range. In the 1 Hz through 10 MHz ranges, the amplitude display is updated once every cycle.

5. **FREQUENCY RANGE (Hz) Switch** – Selects one of the 10 frequency ranges. The range number represents the maximum frequency obtainable for the selected range. Some overranging exists.

6. **SYMMETRY Control** – The large knob selects a right-hand or left-hand waveform time-symmetry. The small VARIABLE knob varies the waveform time-symmetry up to 19:1 or 1:19. When these controls are used, the frequency range is divided by approximately ten; however, the readout shows actual output frequency.

7. **DC OFFSET Control** – Adjusts dc base line offset above (+) or below (–) signal ground; or, when DC is selected on the WAVEFORM switch, adjusts dc voltage at the 50Ω output. The large knob selects polarity, and the small VARIABLE knob adjusts voltage up to ±10 Vdc into an open circuit (±5 Vdc into 50Ω load).

   Peak circuit output is limited to ±15 Vdc into an open circuit (±7.5 Vdc into a 50Ω load). (The OUTPUT ATTEN (dB) switch (9) affects dc offset as well as waveform amplitude.)

8. **WAVEFORM Selector** – This selects the waveform that appears at the 50Ω output. The waveforms are sine ∿, triangle ∧∨, square ⊓⊔, positive going pulse ⊓, negative going pulse ⊔, and DC voltage. See Figure 2-2 for phase and polarity relationships.

9. **OUTPUT ATTEN (dB) Control** – The large knob attenuates the 50Ω output from 0 dB (15 V p-p max into 50Ω load) to –60 dB (15 mV p-p into 50Ω) in 20 dB steps. The small VARIABLE knob may be used to continuously change the amplitude between the detented steps up to 40 dB. Maximum attenuation is –80 dB (1.5 mV p-p into 50Ω). The OUTPUT ATTEN (dB) VARIABLE control is inoperative when DC is selected on the WAVEFORM switch.

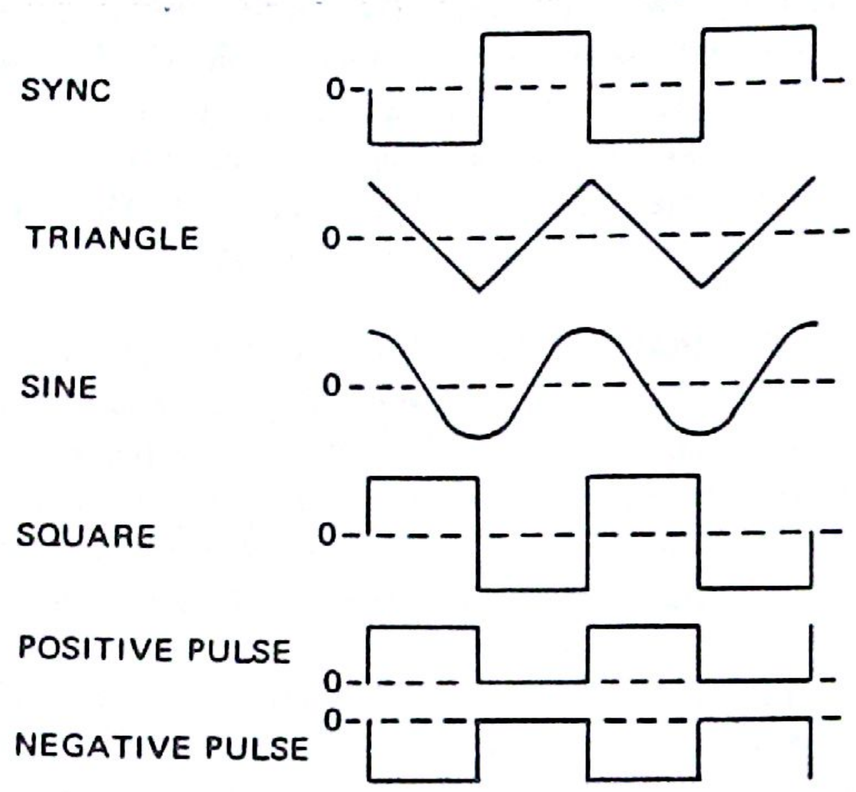

Figure 2-2.
Selectable and Sync Signal Phase and Polarity Relationships

10. **50Ω OUT** – This is the selected waveform output for the main generator or a dc voltage. The Model 147 operating into an open circuit provides 30 V maximum, or into a 50Ω load provides a 15 V p-p output. The displayed amplitude is correct for the 50Ω termination.

11. **SYNC OUT** – This is a square wave (or rectangular if SYMMETRY control is in use) with the same frequency and opposite polarity of the selectable square wave at the 50Ω output. Amplitude into an open circuit is greater than 4 V p-p (2 V p-p into 50Ω). Rise and fall times are less than 50 ns. See Figure 2-2 for phase and polarity relationships.

12. **SWEEP TIME Control** – When in any of the sweep modes, this control determines the duration of the sweep cycle by controlling the frequency of the sweep generator, which is independent of the frequency of the main generator. The large knob selects the range, which is bounded by the time values printed on the panel on either side of the detent setting. The small VARIABLE knob varies the time throughout the range; when full cw, the sweep time is equal to the time printed to the right of the detent line; rotating the VARIABLE knob ccw increases the sweep time at least by 10:1 and up to 100:1. The full ccw position is not calibrated.

13. **SWP/GCV OUT** – When the generator is in CONT, TRIG, or GATED mode, this output provides a fixed 0 to nominal +5 V sawtooth. The frequency of this sawtooth is controlled by SWEEP TIME. When the generator is in CONT SWP, TRIG SWP, or SWP & HOLD mode, the output becomes the generator control voltage (GCV) that is proportional to main generator frequency.

    This voltage may be used to drive the X-axis of an oscilloscope in the X-Y mode or the X-axis of an X-Y recorder, thus converting the recording device from the time to the frequency domain.

14. **SWEEP WIDTH Control** – Determines the amount of sweep when in one of the sweep modes by varying the amplitude of the sweep signal.

15. **TRIG IN** – A dc coupled input with 10 kΩ input impedance. The TRIG LEVEL control adjusts the sensitivity of the generator to this input signal. Sensitivity can be varied to accept signals greater than 1 V to greater than 7.5 V, positive or negative voltage. Maximum voltage is 50 V.

16. **MODE Switch** – Selects the operating mode of the main generator (50Ω OUT) as follows:

    a. **CONT Mode** – The generator operates at the selected frequency and runs continuously. (The SWP/GCV output is a fixed 0 to 5 V ramp in this and the following two modes.)

    b. **TRIG Mode** – The generator will give one complete cycle of output when the MAN TRIG is pressed or for each pulse applied to TRIG IN. The cycle begins and ends at zero phase, which is zero volts or dc voltage level offset. Since the internal sweep operates independently it can be used to provide a repetitive trigger signal by connecting the SWP/GCV OUT to TRIG IN.

    c. **GATED Mode** – Operates the same as TRIG MODE except that the generator will continue to have output for the full time that the MAN TRIG switch is held down or the gate signal at TRIG IN exceeds the gating level set by the TRIG LEVEL control.

    d. **CONT SWP Mode** – The main generator operates continuously and repetitively sweeps from the minimum to maximum frequency as determined by the sweep controls. See Figure 2-3. (In this mode as in the following two sweep modes, SWP/GCV OUT becomes the generator control voltage (GCV) which is proportional to the instantaneous frequency of the generator.)

    e. **TRIG SWP Mode** – The main generator oscillates at the start or low frequency until a trigger signal

is applied. The frequency then sweeps to the maximum frequency as determined by SWEEP WIDTH and then returns to the low frequency until another trigger is applied. See Figure 2-3.

f. **SWP & HOLD Mode** – When gated, the generator sweeps to the high frequency and remains at the high frequency for the duration of the gate signal. When the gate falls, the generator returns to the low frequency. See Figure 2-3.

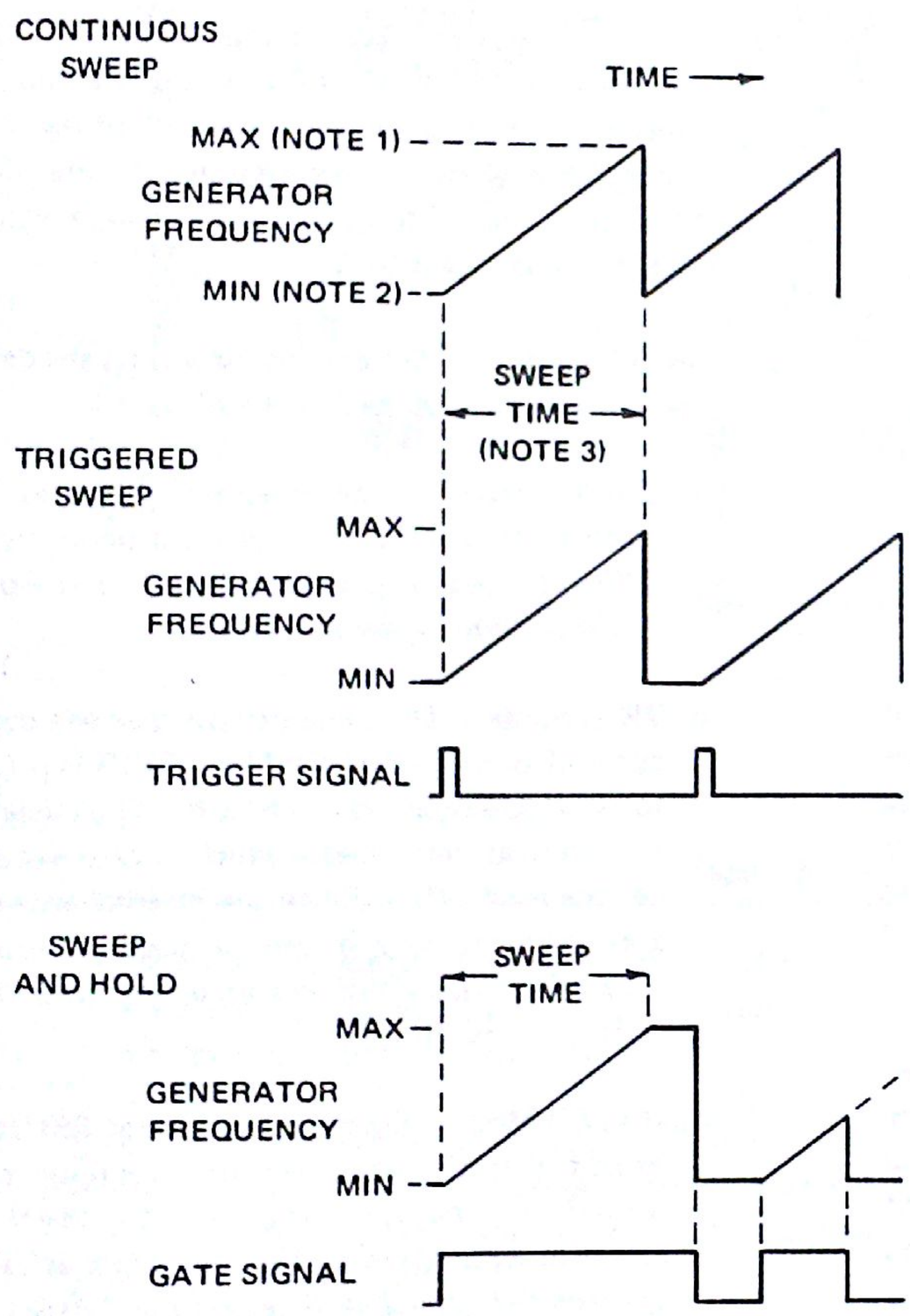

NOTES

1. *Set by SWEEP WIDTH control.*
2. *Set by FREQUENCY control.*
3. *Set by SWEEP TIME control.*

Figure 2-3. Sweep Modes

17. **TRIG LEVEL Control** – Adjusts the sensitivity of the TRIG IN circuitry. When full ccw, approximately +7.5 V or greater voltage is required for triggering. In the full cw position, approximately –7.5 V or greater voltage is required for triggering. By rotating the knob, it is possible to manually trigger the generator. In the GATED mode, the generator will begin to run continuously as the control is rotated cw past the midpoint. When using the MAN TRIG, this control must be ccw of the midpoint.

18. **MAN TRIG** – When in TRIG mode, pressing this switch causes one cycle of the selected waveform to appear at the 50Ω output. When in GATED mode, the waveform is continuous while the switch is pressed. The TRIG LEVEL control must be ccw from midpoint for proper MAN TRIG operation.

19. **FREQUENCY CONTROL** – A combination coarse and fine control used in conjunction with the FREQUENCY RANGE switch and the display to select the desired frequency. The fine or vernier portion of the FREQUENCY CONTROL covers approximately 30 degrees of knob rotation. After the knob has been rotated through the vernier range, further rotation is in the coarse control range. Reversing the direction of rotation immediately places the knob back in the 30 degrees of vernier range again. The usual procedure is to rotate the knob just past the desired frequency, reverse the direction of rotation, and use the fine control range to accurately select the desired frequency.

20. **VCG IN** – This connector allows external control of frequency. With 0 volt in, the generator frequency (50Ω OUT) is determined by the frequency range selected and the FREQUENCY CONTROL setting and is displayed on the LED readout. A positive VCG voltage will increase this frequency, and a negative voltage will decrease the frequency. Input impedance is 5 kΩ. Restrictions for linear operation are (1) FREQUENCY RANGE selection is the upper frequency and the lower frequency is 1000 times below the FREQUENCY RANGE selection and (2) 5 V is the maximum voltage input. Either restriction may be exceeded for nonlinear operation, but operation is not specified.

2.4 INSTALLATION CHECKS

The following procedures are used to determine that the instrument is operating properly. Field calibration and checkout instructions are given in Section 4 to ensure that the instrument complies with the specifications. If the instrument is not operating properly or within specifications, refer to the warranty on the back of the title page.

Use a Tektronix Model 454 oscilloscope or equivalent when performing these installation checks.

1. After connecting the line cord to the ac line, set the front panel controls and switches as follows:

POWER	In
FREQUENCY RANGE	1K
SYMMETRY	OFF
DC OFFSET	OFF
WAVEFORM	⊓
OUTPUT ATTEN (dB)	0
OUTPUT ATTEN (dB) VARIABLE	Fully Clockwise
SWEEP TIME	OFF
MODE	CONT
READOUT FUNCTION FREQ	In

2. Connect the 50Ω OUT connector with a shielded cable terminated in a 50 ohm load to the oscilloscope and set FREQUENCY CONTROL to obtain a 1 kHz reading on the 147 display.

3. Press the PK AMPL MAX push button. Approximately +7.5 V should be displayed. Press MIN; approximately −7.5 V should be displayed. Observe the oscilloscope and verify the 1 kHz sine wave and peak voltages.

4. Set the OUTPUT ATTEN (dB) VARIABLE control full ccw. Approximately −0.7 V should be displayed. Compare with oscilloscope values.

5. Check minimum and maximum amplitudes of sine ∿ and triangle ∧∨ waveforms. They should be approximately plus and minus 7.5 V at 0 dB.

6. Check minimum and maximum amplitudes of positive and negative pulse waveforms ⊓ and ⊔. They should be approximately +7.5 V, 0 V and 0 V, −7.5 V, respectively at 0 dB.

7. Set the OUTPUT ATTEN (dB) VARIABLE control full clockwise and the WAVEFORM switch to ∧∨ and press the FREQ push button. Adjust the FREQUENCY CONTROL for a 1 kHz readout.

8. Switch the FREQUENCY RANGE control to check range-to-range tracking accuracy. The 147 should read approximately the FREQUENCY RANGE value. Verify the frequencies with the oscilloscope.

9. Select the square waveform and rotate the SYMMETRY switch to ⟋⟍ and the VARIABLE control full clockwise. Waveform asymmetry should be approximately 19:1. Rotate the VARIABLE control full ccw; the waveform should be symmetrical. Verify that the other switch position and VARIABLE control give approximately 1:19 waveform asymmetry.

10. Turn the SYMMETRY switch to OFF; press the PK AMPL MAX push button and select DC on the WAVEFORM switch.

11. Set the DC OFFSET switch to + and rotate the VARIABLE control full clockwise. The readout should be approximately +5 V. Verify the reading with the oscilloscope.

12. Set the DC OFFSET switch to −. Readout should be approximately −5 V. Verify the reading with the oscilloscope.

13. Rotate the OUTPUT ATTEN (dB) switch through each position. Verify the attenuation on the oscilloscope. (The VARIABLE control is inoperative for DC.)

14. Turn the DC OFFSET switch to OFF and connect the SWP/GCV OUT to the oscilloscope without a load. With the SWEEP TIME switch set to 10 ms/1 ms and the VARIABLE control set full clockwise (1 ms sweep), verify that the SWP/GCV OUT waveform is approximately a 1 kHz sawtooth. Set the VARIABLE control full ccw. The SWP/GCV OUT waveform should be approximately 100 Hz.

15. Check the SWP/GCV OUT frequency in all positions of the SWEEP TIME switch and at both the cw and ccw ends of the VARIABLE control.

16. Use a shielded cable equipped with BNC connectors to connect SWP/GCV OUT to TRIG IN and connect the oscilloscope to 50Ω OUT. Set the MODE switch to TRIG, the WAVEFORM switch to ∧∨ and the SWEEP TIME to 1 s/0.1 s. Rotate the TRIG LEVEL control while observing the oscilloscope. One cycle of the waveform should be displayed each time the sweep output triggers the main generator.

17. Set the MODE switch to GATED and rotate the TRIG LEVEL control while observing the oscilloscope. The multiple cycles of the selected output waveform should appear when the TRIG LEVEL control is rotated full cw and disappear when the control is turned full ccw.

18. This step sets low and high frequencies of the sweep range. Disconnect the cable to TRIG IN. Set the MODE switch to SWP & HOLD, the SWEEP WIDTH control full clockwise, the TRIG LEVEL control to 9 o'clock and the FREQUENCY RANGE switch to 10K. Set the SWEEP TIME switch to 100 s/1 s and the SWEEP TIME VARIABLE control full clockwise. Set the output frequency to 0.1 kHz with the FREQUENCY CONTROL. Rotate the TRIG LEVEL control to 3 o'clock and set the SWEEP WIDTH control

for a 10 kHz readout. Repeat the low and high frequency settings because of interaction. Set the MODE switch to CONT SWP. Set the SWEEP TIME VARIABLE control full ccw. The displayed output should sweep from 100 Hz to 10 kHz.

19. Set the MODE switch to TRIG SWP and press the MAN TRIG switch while observing the oscilloscope. Displayed output should sweep once from 100 Hz to 10 kHz.

20. Connect the SWP/GCV OUT connector to the oscilloscope input without a load. Set the MODE switch to CONT, SWEEP TIME switch to 10 ms/1 ms and the SWEEP TIME VARIABLE control full clockwise. The oscilloscope should display approximately a 1 kHz sawtooth waveform.

21. Set the MODE switch to TRIG and then to GATED. The same 1 kHz sawtooth waveform should be present in these modes.

22. Set the MODE switch to CONT SWP, then TRIG SWP, then SWP & HOLD. The SWP/GCV OUT signal should be a GCV signal proportional to the instantaneous frequency of the main generator.

2.5 OPERATING PROCEDURE

No preparation for operation is required beyond the completion of the initial installation checks given in Paragraph 2.4. A one-half hour warm-up period should be allowed for the associated equipment to reach a stabilized operating temperature, and for the Model 147 to attain stated accuracies.

2.5.1 Operation as a Function Generator

1. Properly terminate the 50Ω OUT connector for accurate voltage readings.

2. Select desired output waveform using the WAVEFORM switch.

3. Set MODE switch to CONT.

4. Press the FREQ push button; set the FREQUENCY RANGE switch to the desired range, and set FREQUENCY CONTROL for the desired frequency. (For frequency readout press the READOUT FUNCTION FREQ push button.)

5. Set the OUTPUT ATTEN (dB) switch for the desired output level and amplitude. (For amplitude readout, press the READOUT FUNCTION AMPL MAX or MIN push button.) For reference, Table 2-1 gives the approximate output amplitude levels at attenuator settings. The output levels of the positive and negative pulse waveforms are one half of these levels. The maximum amplitude voltage is ±7.5 volts.

Table 2-1

Attenuator Position	Peak to Peak Output into 50Ω Load	
	Maximum (variable full cw)	Minimum (variable full ccw)
0 dB	15 V	1.5 V
−20 dB	1.5 V	150 mV
−40 dB	150 mV	15 mV
−60 dB	15 mV	1.5 mV

6. With the DC OFFSET and SYMMETRY controls turned to OFF, the output waveform should be a symmetrical waveform oscillating around a zero dc reference point (except when a positive or negative pulse has been selected).

7. To add dc offset, first set the DC OFFSET control for the polarity of dc offset desired. Next, change the WAVEFORM switch to DC position and, using the readout display, adjust the DC OFFSET VARIABLE control until the desired amount is read on the display. Return the WAVEFORM switch to the selected waveform position. If an excessive amount of dc offset is used, waveform clipping may be observed and the display will flash. The sum of peak waveform voltage and the dc offset cannot exceed the maximum rated output of the generator. For example, on the 0 dB attenuator setting, the maximum output is 15 V peak-to-peak or 7.5 V peak above and below zero volt. Therefore, offset plus the peak voltage cannot exceed 7.5 V peak. See Figure 2-4.

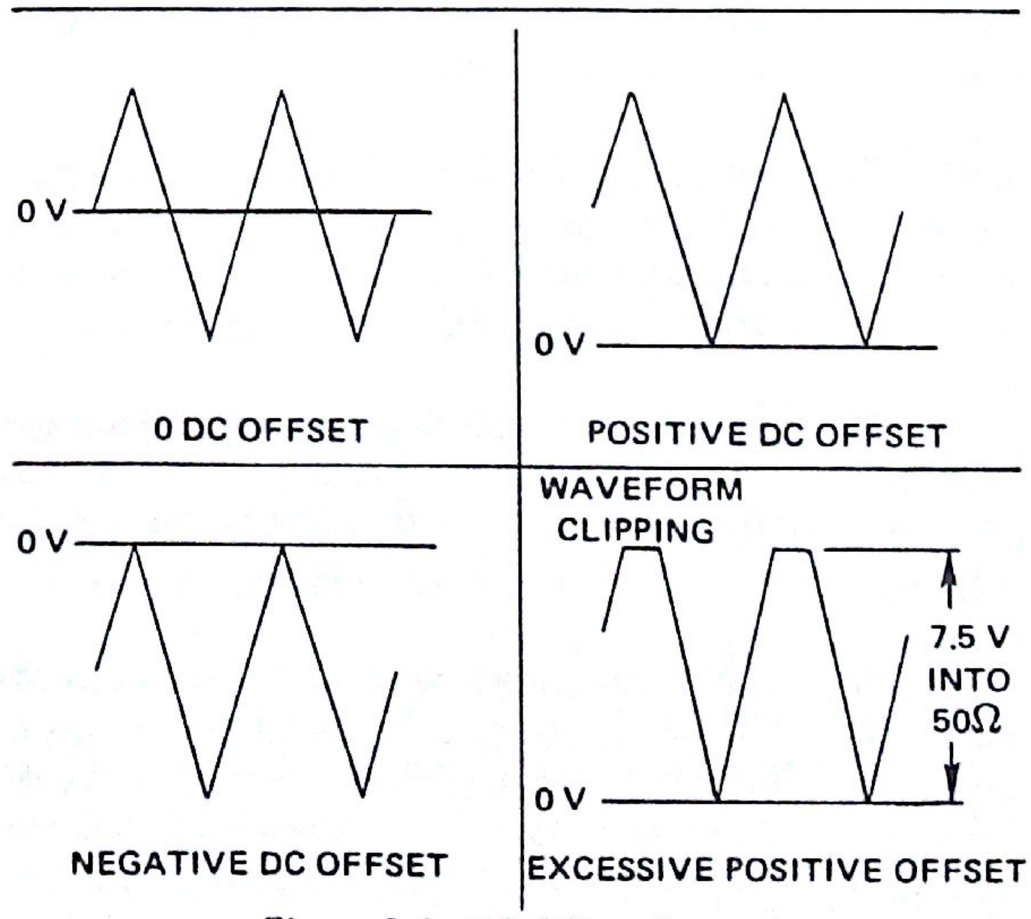

Figure 2-4. DC Offset Control

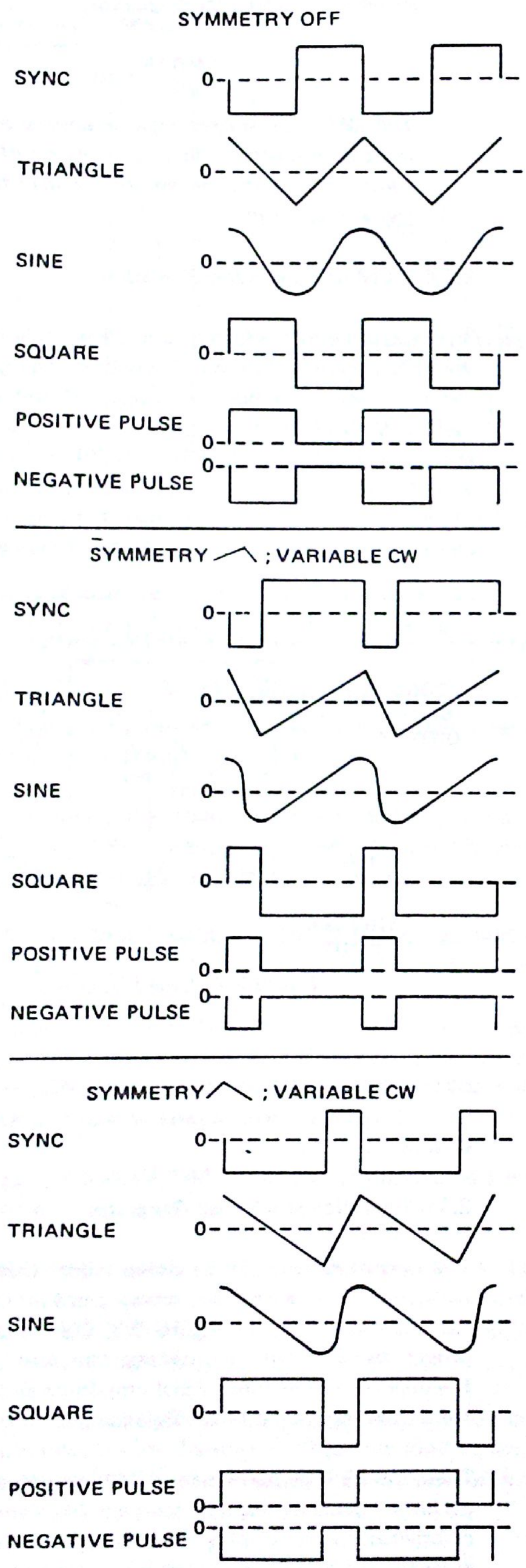

Figure 2-5. Waveform Phasing and Symmetry Control

8. Set SYMMETRY control for desired symmetry or asymmetry. The symmetry control can be used to develop ramp waveforms with variable rise/fall ratios and single or multiple pulses with variable duty cycles. By using the sine wave with asymmetry, controllable sine distortion can be developed. Figure 2-5 shows the effect of this control on output waveforms. The frequency of an asymmetrical waveform will be approximately a factor of 10 lower than the symmetrical waveform frequency output.

2.5.2 Operation as a Voltage Controlled Generator

The VCG input connector can be used to externally control the frequency of the generator. If a positive voltage is applied to the VCG input terminal, the frequency will increase from the FREQUENCY CONTROL setting. A negative voltage will cause the frequency to decrease from the FREQUENCY CONTROL setting.

A 5 V excursion in VCG voltage can vary the frequency up to 1000:1 in each range as follows:

Range	Limits for Linear Operation	
	Lower	Upper
0.01	0.01 mHz	0.01 Hz
0.1	0.1 mHz	0.1 Hz
1	1 mHz	1 Hz
10	10 mHz	10 Hz
100	100 mHz	100 Hz
1K	1 Hz	1 kHz
10K	10 Hz	10 kHz
100K	100 Hz	100 kHz
1M	1 kHz	1 MHz
10M	10 kHz	10 MHz

As shown, the range setting is the upper limit. This limit may be exceeded as there is a 10 to 20% overranging capability; however, overranging will be nonlinear and the operation is unspecified. Operation below the lower limit of any range setting is not recommended.

The nomograph of Figure 2-6 shows the characteristics of the VCG circuit. Column A gives a factor which is multiplied by the FREQUENCY RANGE to give the frequency shown in the readout. (Example: Column A X FREQUENCY RANGE = Readout Frequency or 0.3 X 100 = 30.0 Hz.) Column B is the voltage applied to the VCG IN. Column C (like A) is the factor which is multiplied by the FREQUENCY RANGE to give the frequency shown in the readout after the VCG voltage has been applied.

EXAMPLE:

Freq Range	Readout	Column A	Column B	Column C	Readout
100	30.0 Hz	0.3	+3.5 V	1	100 Hz
100	30.0 Hz	0.3	−1.5 V	0.001	0.1 Hz

NOTE

A further increase in VCG voltage will cause nonlinear operation as the range value will be exceeded.

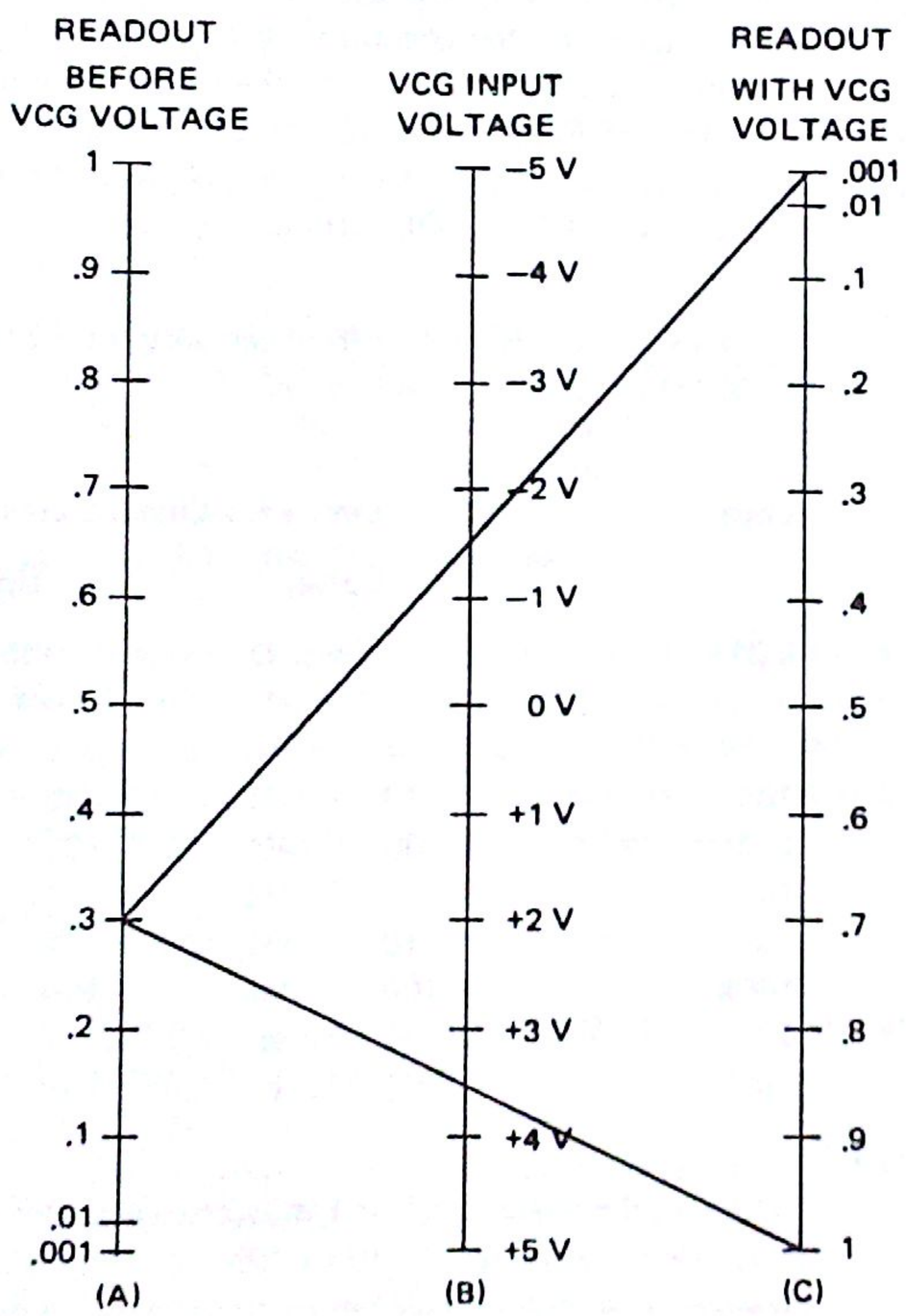

Figure 2-6. VCG Voltage-to-Frequency Nomograph

2.5.3 Operation as a Triggered Generator

1. Adjust the generator as for continuous operation (Paragraph 2.5.1); then set the MODE switch to TRIG.

2. If manual triggering is desired, set the TRIG LEVEL control (small knob) to the 11 o'clock position. For external triggering, set the TRIG LEVEL control to exclude undesirable trigger levels.

3. Operate the MAN TRIG switch or apply a 1 to 50 V signal to the TRIG IN connector.

NOTE

The SWP/GCV output may be used as a repetitive trigger source. In this case, the SWEEP TIME control determines the repetition rate of the triggered output signal.

2.5.4 Gated or Tone Burst Operation

With the generator adjusted as in trigger operation, change the MODE control to GATED position. The generator output will then be a burst of cycles. If the trigger is the SWP/GCV OUT sawtooth waveform, the duration of the burst is adjustable by the TRIG LEVEL control (see Figure 2-7). Notice that the last cycle gated is completed even if the gate signal is removed. In manual gating, the tone burst continues as long as the manual switch is pressed.

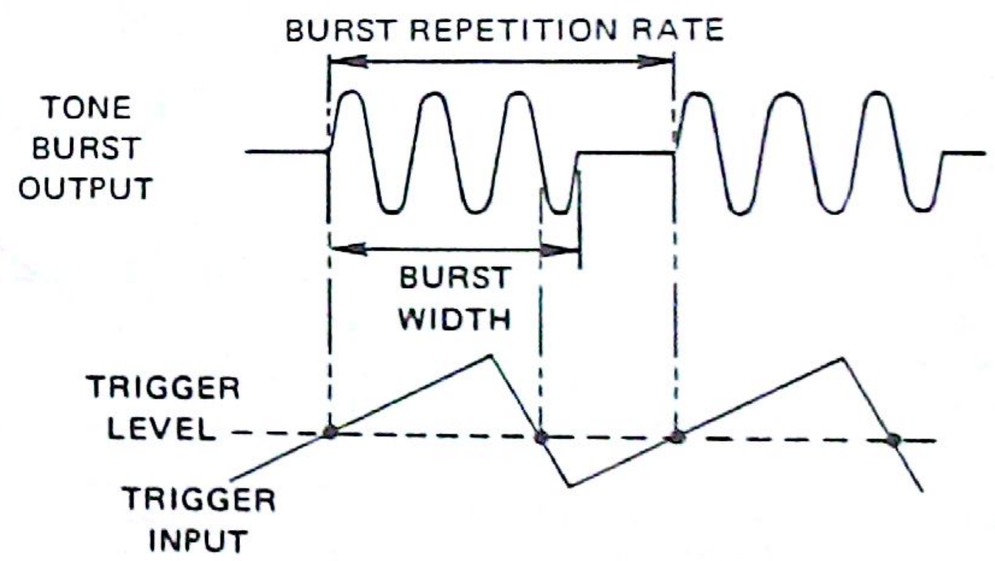

Figure 2-7. Gated Operation

The generator can be made to free run in this mode at certain settings of the trigger level control. By resetting the TRIG LEVEL control, normal gated operation can be re-established.

2.5.5 Operation as a Sweep Generator

The operation of the three sweep modes (continuous with sweep, triggered sweep, and sweep and hold) can be visualized by the graphs in Figure 2-3. Operation consists of proper terminations, and setting the low and high end frequencies, sweep time, signal amplitude and sweep mode. All are covered in the following example.

These modes together with the GCV output can be used to perform frequency response tests and drive an X-Y recorder or oscilloscope for display of the frequency response. As an example, Figure 2-8 shows a circuit under test which is to be swept and the frequency response of the circuit displayed

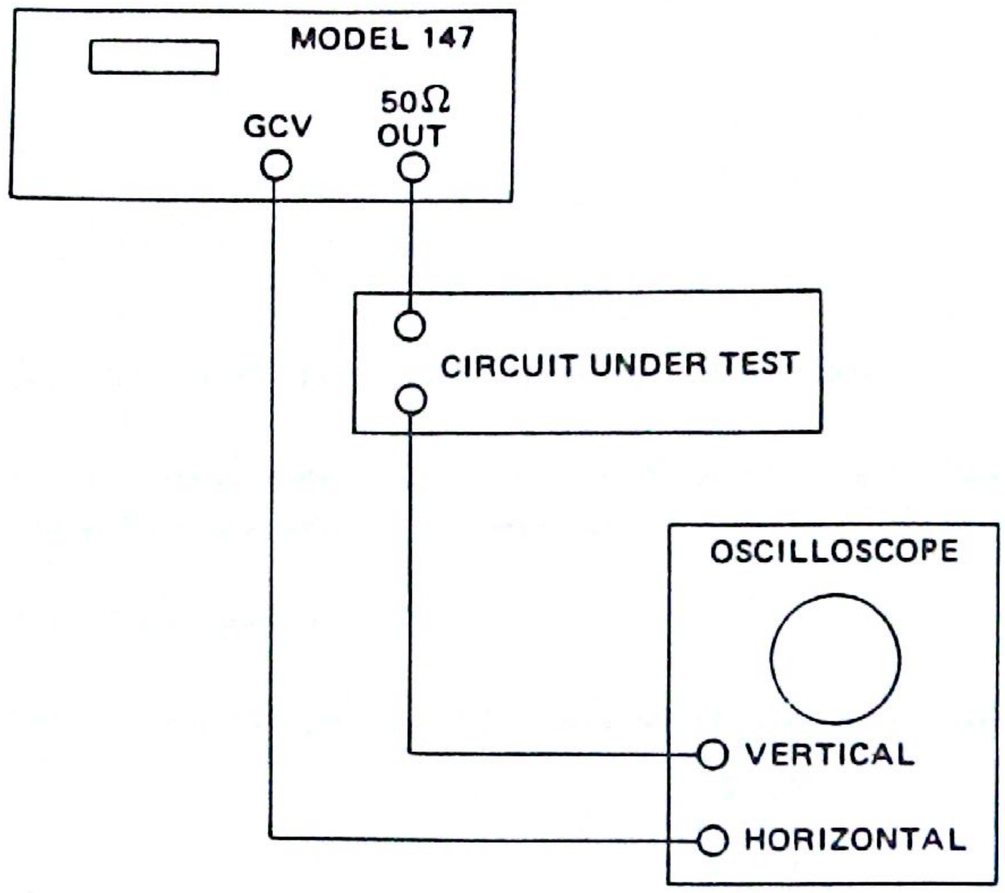

Figure 2-8. Frequency Response Test Using an Oscilloscope in the X-Y Mode

on the oscilloscope. Figure 2-9 shows a similar setup using an X-Y recorder. The following procedure is used to set up the Model 147 as a sweep generator.

1. Terminate the 50Ω output with 50Ω. Setup as in Figure 2-8 or 2-9 except bypass the circuit under test for this setup procedure.

2. Set the MODE switch to SWP & HOLD, the SWEEP TIME switch to OFF, and TRIG LEVEL to 9 o'clock.

3. Depress the READOUT FUNCTION FREQ push button and use the FREQUENCY RANGE switch and the FREQUENCY CONTROL switch to obtain the desired low frequency on the display.

4. Set the SWEEP TIME controls for the desired sweep time.

5. Rotate the TRIG LEVEL control to 3 o'clock. The frequency sweeps to the top and holds. Then rotate the SWEEP WIDTH control until the desired top frequency is displayed.

6. Rotate the TRIG LEVEL control back to 9 o'clock and reset the low frequency. Check the top frequency again and return the TRIG LEVEL control back to 9 o'clock.

7. Use the READOUT FUNCTION PK AMPL push buttons and the display and the OUTPUT ATTEN (dB) controls to obtain the desired signal amplitude.

8. With the circuit under test bypassed, and the oscilloscope, if used, in the external horizontal mode, adjust the horizontal position so that the trace is positioned on the left reticle on the screen or chart.

9. Rotate the TRIG LEVEL control to 3 o'clock and adjust the horizontal gain of the oscilloscope or recorder so that the waveform is positioned on the extreme right hand reticle, or any convenient reticle of the screen or chart for proper scaling.

10. Set the SWEEP TIME controls as desired for sweep duration. Sweep fast for the best oscilloscope presentation and sweep slow if the X-Y recorder is used.

11. For continuous sweep, rotate the MODE switch to TRIG. For triggered sweep or sweep and hold operation, adjust the TRIG LEVEL control to 9 o'clock for manual triggering or gating, or adjust as desired for external triggering or gating.

12. Insert the circuit to be tested as in Figures 2-8 or 2-9 and observe the frequency response characteristics shown on the oscilloscope or recorder.

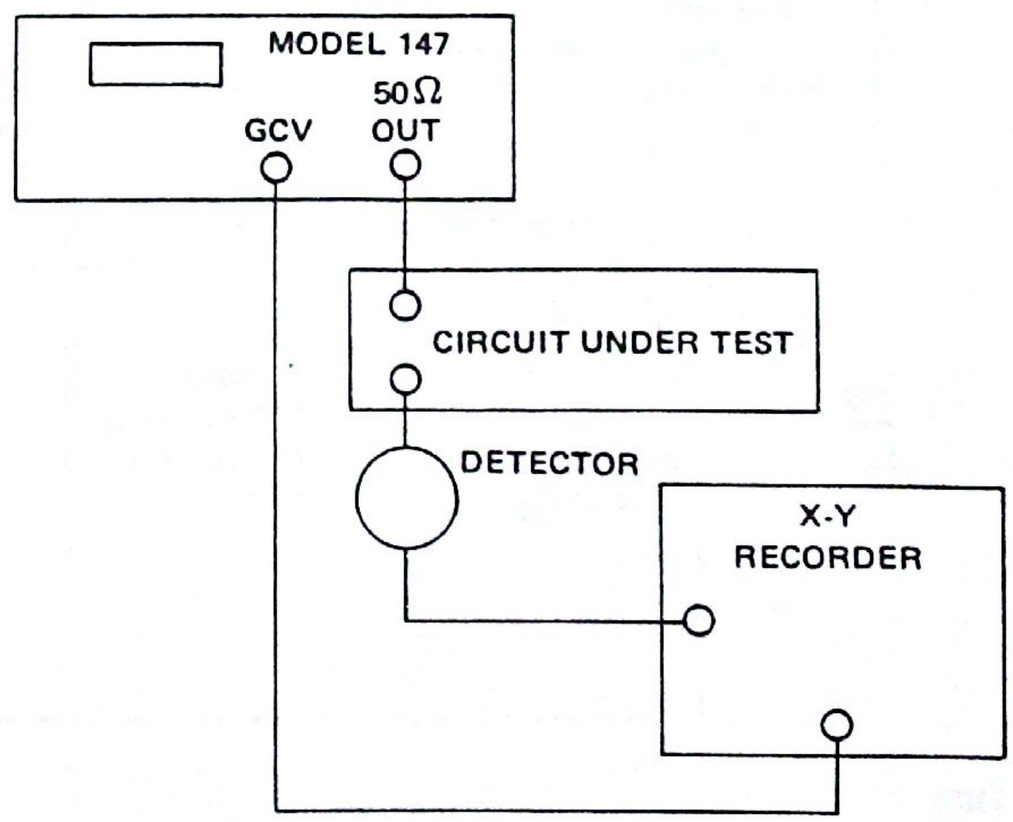

Figure 2-9. Frequency Response Test Using an X-Y Recorder

SECTION 3
CIRCUIT DESCRIPTION

3.1 SIMPLIFIED BLOCK DIAGRAM ANALYSIS

This paragraph describes, briefly, the major circuit elements and their relationship to one another.

3.1.1 Main Generator

Refer to Figures 3-1 and 3-2 when reading this description.

As shown in Figure 3-1, the VCG summing amplifier sums the currents from the FREQUENCY CONTROL, vernier, and VCG IN connector. The VCG summing amplifier is an inverting amplifier whose output voltage is used to control a positive current source and a negative current source. For symmetrical output waveforms, the currents from the two current sources are equal and directly proportional to the voltage of the VCG summing amplifier output. The diode

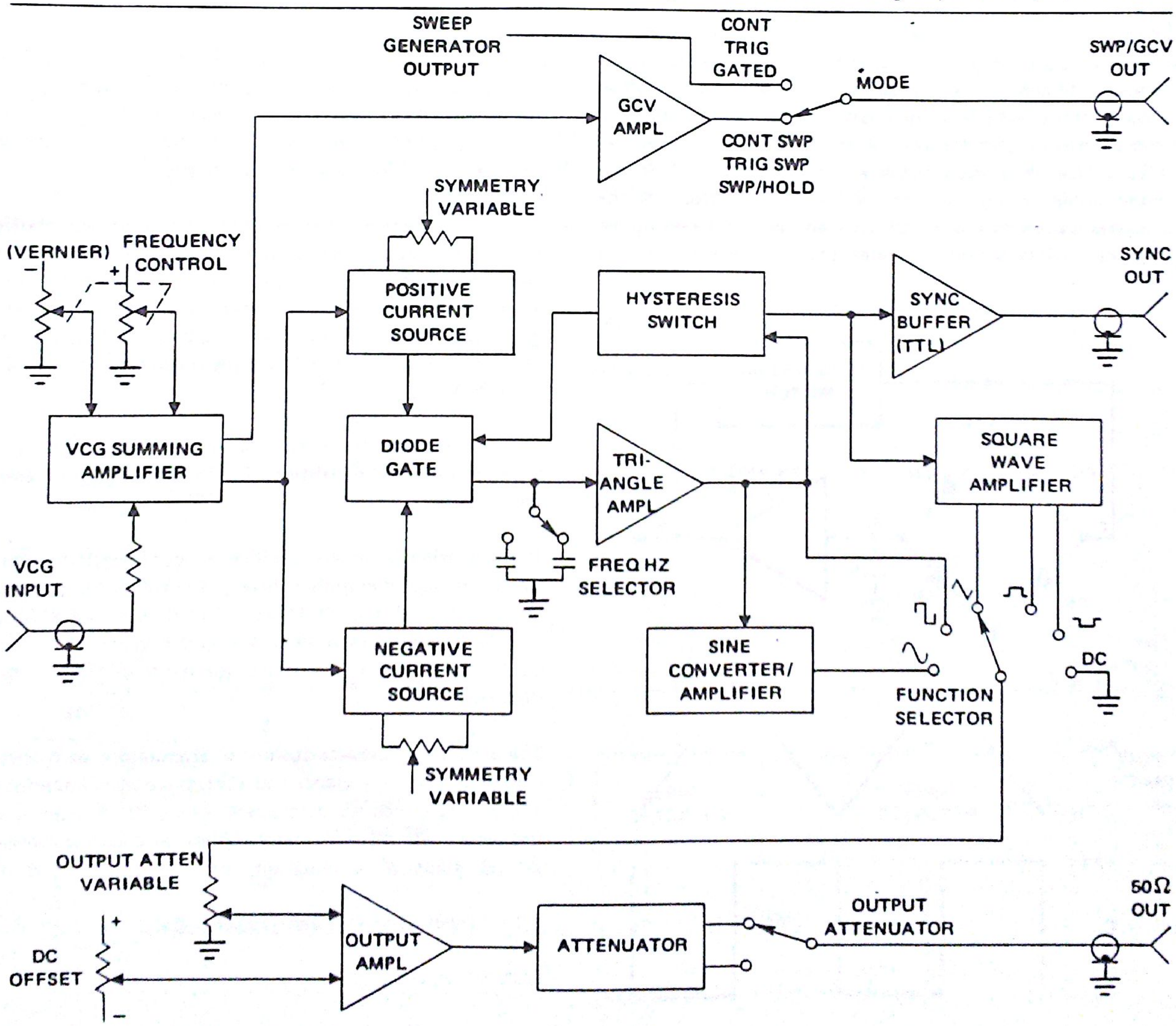

Figure 3-1. Main Generator Block Diagram

gate, which is controlled by the hysteresis switch, is used to switch the positive current or the negative current to the timing capacitor selected by the FREQUENCY RANGE (Hz) selector. If the positive current is switched into the timing capacitor, the voltage across the capacitor will rise linearly to generate the triangle rise transition. If the current is negative, the voltage across the timing capacitor will fall linearly to produce the fall transition.

The triangle amplifier is a unity gain amplifier whose output is fed to the hysteresis switch as well as to the sine converter. The hysteresis switch has two voltage limit points (+1.25 V and −1.25 V).

During the time the output voltage of the triangle amplifier is rising, the output voltage of the hysteresis switch is positive. But when the output voltage of the triangle amplifier reaches +1.25 V, it triggers the hysteresis switch causing the switch output to go negative. Once the control voltage into the diode gate becomes negative, it will switch the positive current out and switch the negative current in to the timing capacitor, so that the voltage across the capacitor will reverse, starting a linear decrease of the waveform. When the decreasing voltage reaches −1.25 V, the output of the hysteresis switch will switch back to positive, reversing the process. This action generates the triangle waveform as shown in Figure 3-2. Since the output of the hysteresis switch is a square wave, the result is simultaneous generation of a square wave and a triangle wave at the same frequency.

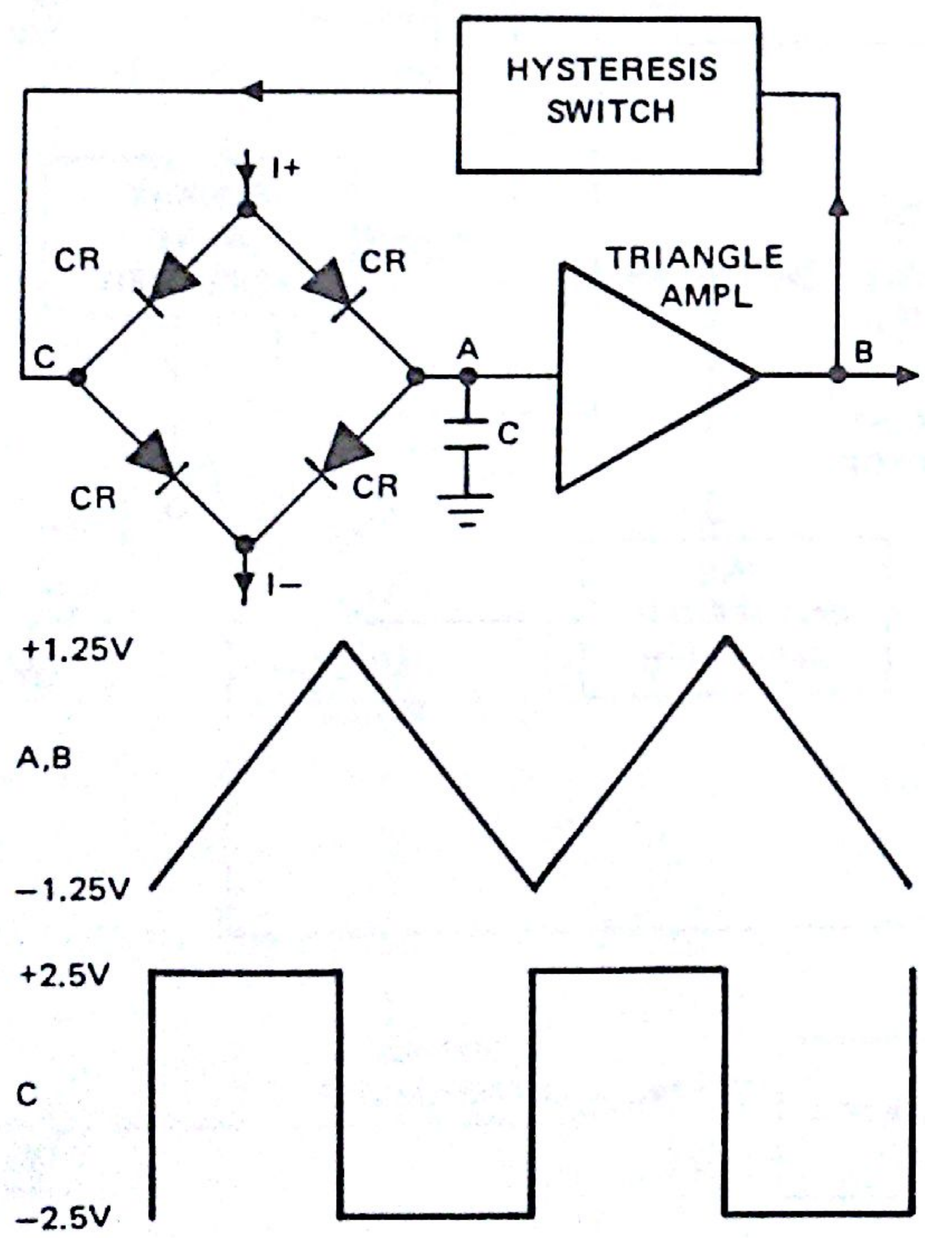

Figure 3-2. Basic Generator Timing Diagram

The output frequency is determined by the magnitude of the capacitor selected by the FREQUENCY RANGE (Hz) selector and the magnitude of the positive and negative current sources. Since the current sources are linearly proportional to the control voltage of the VCG circuit, the output frequency will also be linearly proportional to the control voltage.

If the current of the negative current source is decreased by 19 times, the fall time of the triangle will be 19 times longer than the rise time of the triangle, resulting in an unsymmetrical waveform and a division of the frequency by a factor of 10. Gradually increasing the current from the negative current source and decreasing the current from the positive current source in such a way that the period for the triangle to complete one cycle remains constant, the symmetry of the output waveform can be continuously varied while the frequency is held constant.

The output of the hysteresis switch is fed to the sync buffer and also the square wave amplifier. The square wave amplifier consists of a shaping circuit which limits the output swing to ±1.25 volts. For positive pulse outputs, it limits the output voltage swing from −1.25 V to 0 V; and for negative pulse outputs, it limits the output swing from 0 V to +1.25 V.

The output signal from the triangle amplifier is applied to the sine converter, consisting of a sine shaping circuit and a sine amplifier.

The sine, triangle, square, positive pulse, or negative pulse is fed to the output amplifier through the WAVEFORM selector switch and the OUTPUT ATTEN (dB) VARIABLE control. The output amplifier is an inverting amplifier whose output is fed into a step attenuator and then to the output BNC connector.

The attenuator consists of three pi attenuators, each having a 50 ohm input impedance and a 50 ohm output impedance. There is one −20 dB attenuator, one −40 dB attenuator, and one −60 dB attenuator. These attenuators provide 20 dB steps of attenuation, from 0 dB to −60 dB.

3.1.2 Sweep Generator and Trigger Logic

CONTINUOUS MODE

In this mode, both the main generator and the sweep generator operate independently. As shown in Figure 3-3,

the sweep generator is a passive integrator with a voltage controlled current source. The output of the sawtooth amplifier changes the states of both the peak and zero detectors when either the peak or the zero limit is reached, thus switching on and off the current source output. The result of this charging and discharging of the timing capacitor is a continuous generation of a sawtooth waveform.

The charging and discharging rate of the timing capacitor, and also the repetition rate of the sawtooth waveform, are proportional to the amount of current fed into the capacitor and the size of the capacitor. The amount of current output is proportional to the controlling voltage and the current programming resistor. Thus, the repetition rate is controlled by the SWEEP TIME VARIABLE control and the SWEEP TIME range selector switch.

The current source switch provides a shunt path to signal ground for the timing capacitor when the sawtooth waveform is in the negative slope region. Switching action is activated by the peak detector and the zero detector outputs. The sawtooth amplifier is a non-inverting, high input impedance, high slew rate amplifier providing low output impedance and complete isolation for the passive integrator.

The peak and zero detectors accomplish detection of both extremes of the sawtooth waveform. The outputs of these two detectors, in conjunction with other transistor switches, cause the current source switch to place a shunt path across the timing capacitor or remove the shunt path. Thus, the operational loop is completed for the continuous mode operation of the sweep generator.

TRIGGERED OR GATED MODE

Refer to Figure 3-4. In both the triggered and the gated modes, the main generator and the sweep generator operate independently.

When this instrument is in the TRIG mode and ready, the main generator diode gate is switched off by the trigger gate control, and the timing capacitor is discharged through the shunt path. When a trigger signal arrives at the trigger gate control, the control flip-flop changes the state, opening the diode gate. Current flows into the timing capacitor, allowing the passive integrator to generate a triangle waveform. The control flip-flop is reset by the square wave from the sync amplifier when the proper phase triggers the flip-flop. The flip-flop output, in conjunction with the level-

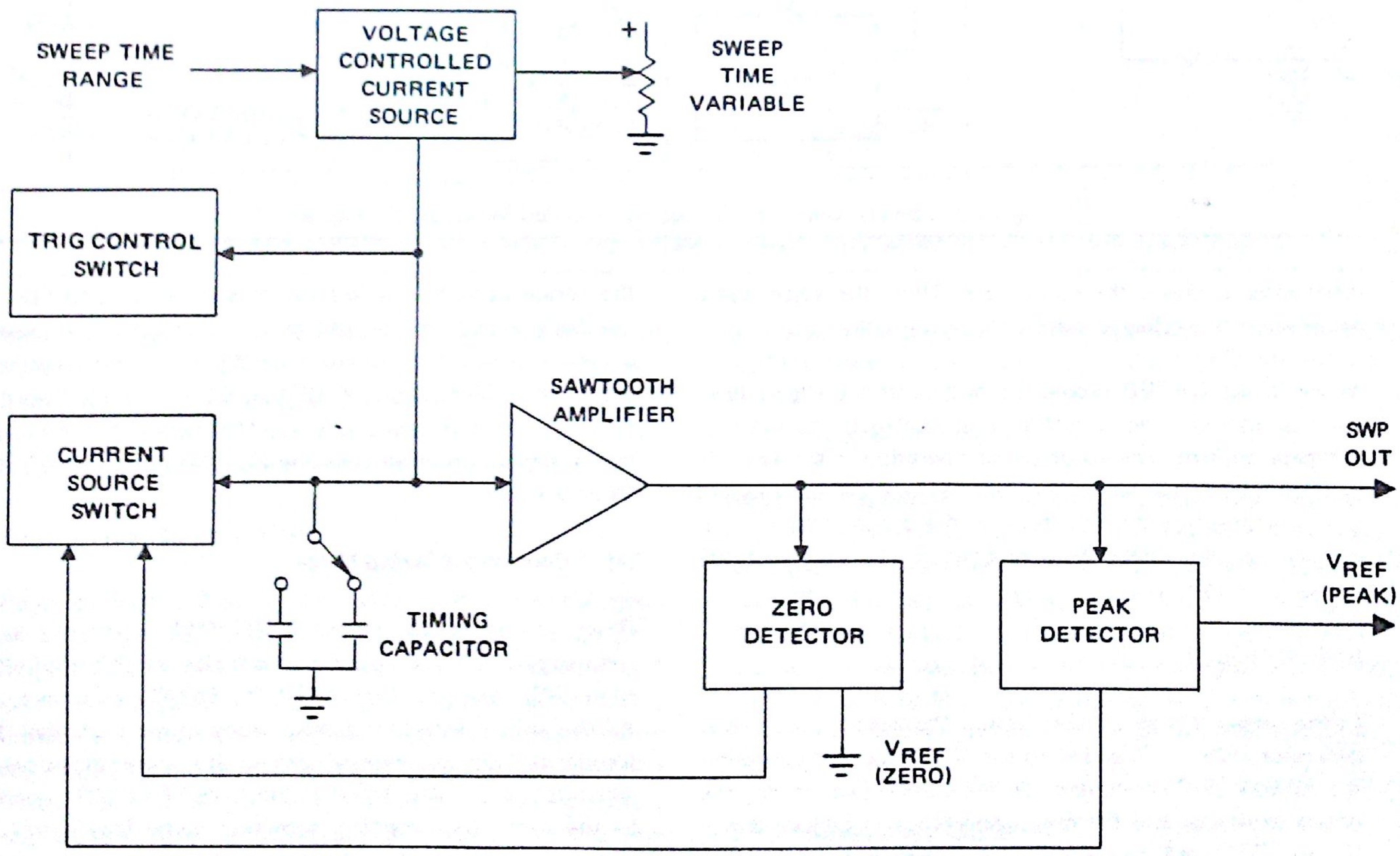

Figure 3-3. Sweep Generator Block Diagram

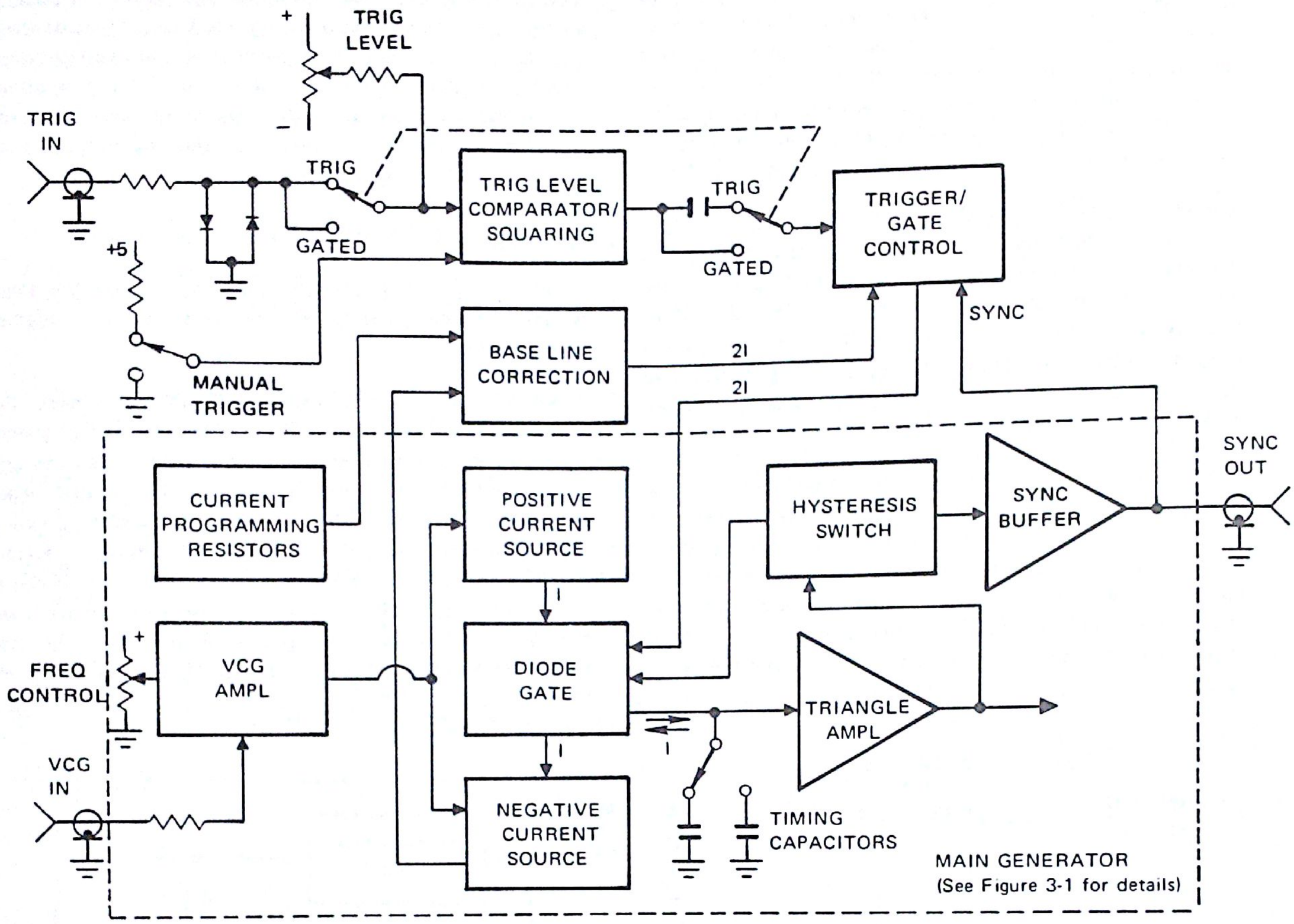

Figure 3-4. Sweep Generator Triggered or Gated Mode Block Diagram

shift circuit, closes the diode gate. Thus, the single cycle generation of a selected waveform is accomplished.

When in the GATED mode, the output of the trigger level comparator/squaring circuit is coupled directly to the trigger/gate control. The sequence of operation is the same as that of the TRIG mode, except that one or more cycles are generated for the duration of the trigger (gate) signal applied to the TRIG IN connector, or as long as MAN TRIG is depressed.

SWEEP MODES

In the sweep modes of operation, a third input (the sweep generator output) is added to the VCG amplifiers through the SWEEP WIDTH control. In the CONT SWP mode, the sweep generator and the main generator run continuously. In the TRIG SWP mode, the main generator runs continuously at the minimum frequency set by the FREQUENCY CONTROL and FREQUENCY RANGE (Hz) selector; and the sweep generator is initially in a standby condition. In the SWP HOLD mode, the main generator continuously generates a selected waveform at the maximum frequency set by the FREQUENCY CONTROL and FREQUENCY RANGE (Hz) selector. The sweep generator is again initially in a standby condition awaiting a trigger pulse at the TRIG IN connector.

(a) Continuous Sweep Mode

Refer to Figure 3-5. In the CONT SWP mode, the basic frequency of the main generator is set by the FREQUENCY CONTROL and the FREQUENCY RANGE (Hz) selector. As the sweep generator output starts moving positive, the frequency increases linearly because the output of the sweep generator is coupled through the SWEEP WIDTH control to the first VCG amplifier summing node. Maximum frequency is determined by the basic frequency and the setting of the SWEEP WIDTH control. It should be noted that the maximum SWEEP WIDTH (fully cw) is usable only when

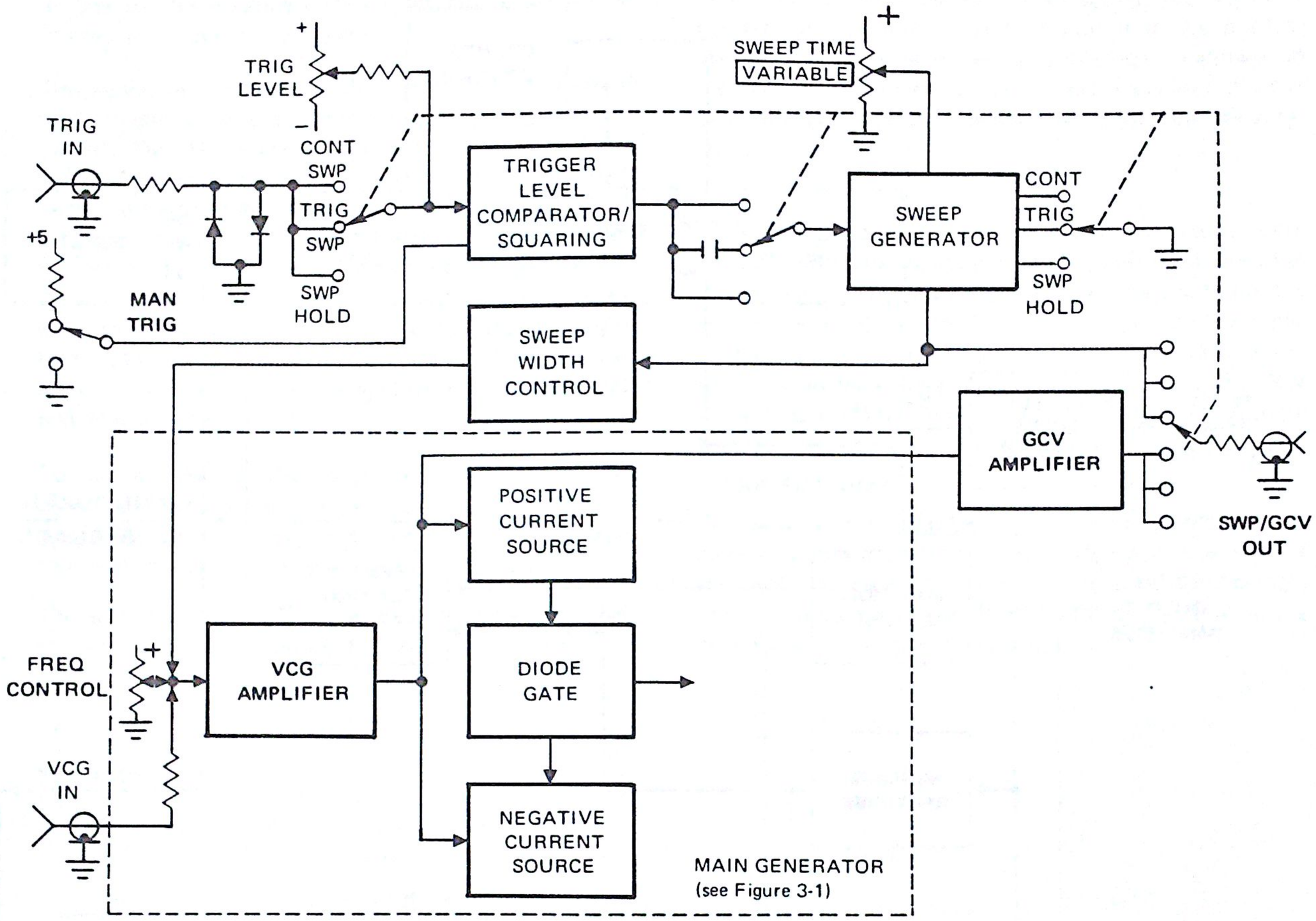

Figure 3-5. Sweep Generator Continuous Sweep, Triggered Sweep, and Sweep and Hold Mode Block Diagram

the basic frequency is set to less than 1/100 of the maximum frequency in the selected range. The swept output waveform repeats for as long as the MODE switch is set to CONT SWP. SWEEP TIME switch and SWEEP TIME VARIABLE control determine the sweep repetition rate.

(b) Triggered Sweep Mode

Refer to Figure 3-5. In the TRIG SWP mode, the main generator runs continuously at the minimum frequency set by the FREQUENCY CONTROL and the FREQUENCY RANGE (Hz) selector. The sweep generator is, initially, in a standby condition. When an input trigger signal is applied at the TRIG IN connector, or the MAN TRIG is depressed, the output of the trigger level comparator/squaring circuit changes the state of the trigger/gate control circuit. The output of the trigger level comparator/squaring circuit is coupled through a capacitor to release the sweep generator clamp for a single cycle. Thus, a single sweep of the main generator is accomplished. The operation of the SWEEP WIDTH control is the same as in the CONT SWP mode.

(c) Sweep and Hold Mode

Refer to Figure 3-5. In the SWP HOLD mode, the main generator continuously generates the minimum frequency set by the FREQUENCY CONTROL and FREQUENCY RANGE (Hz) selector. When the TRIG IN is gated, or MAN TRIG depressed, the sweep generator will ramp up and hold at its maximum until the gate signal is removed from TRIG IN or MAN TRIG is released. The operation of the SWEEP WIDTH control is the same as in the CONT SWP mode.

3.1.3 Measurement Circuitry

Refer to Figure 3-6. The main board contains the necessary circuit for frequency counting and displays. The frequency

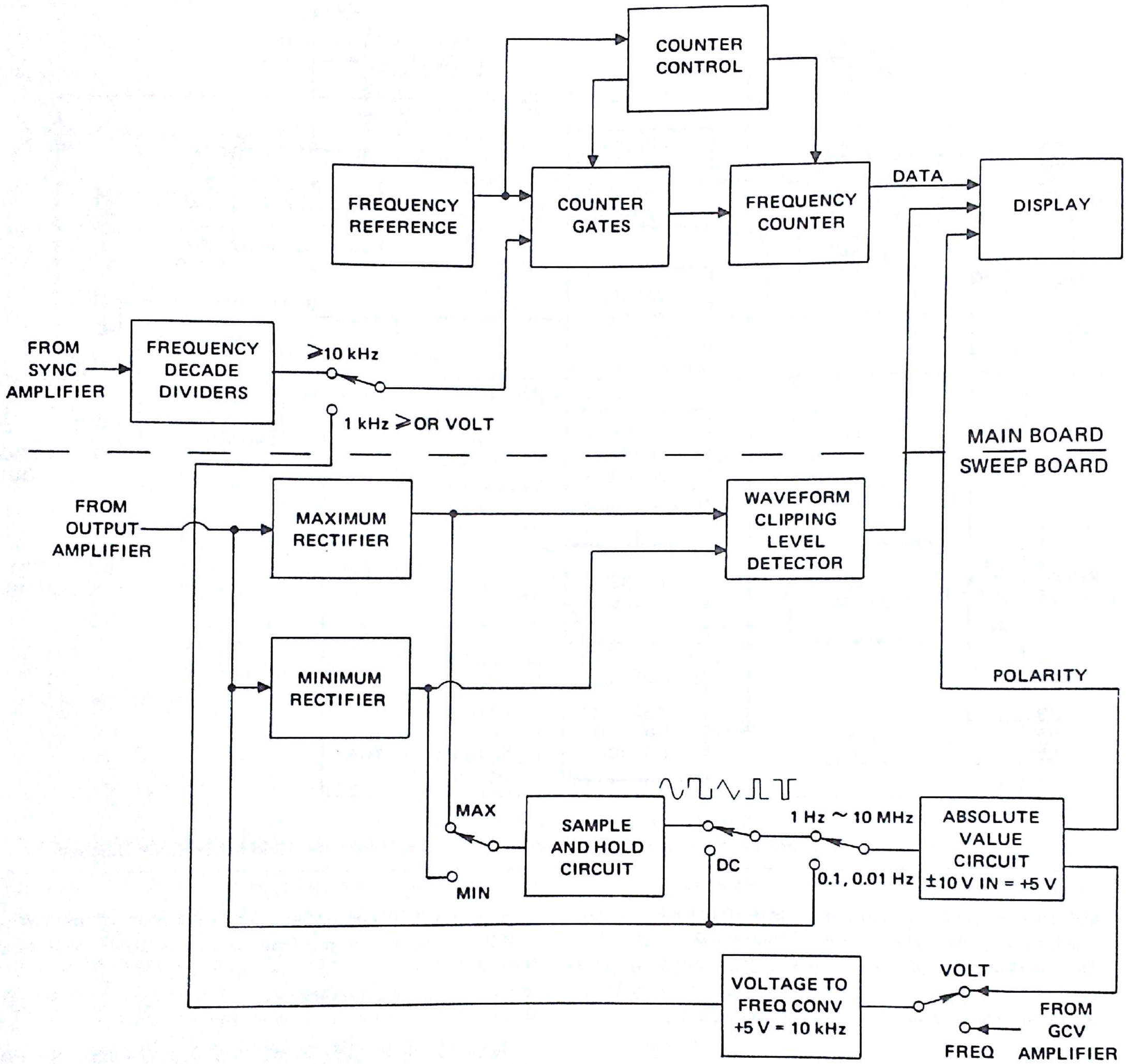

Figure 3-6. Measurement (Voltage and Frequency) Circuit Block Diagram

reference is a stable fixed frequency generator set precisely at 40 Hz.

The counter gate opens precisely for 200 ms and the frequency counter counts the number of pulses which went through the gate during the interval.

In order to normalize the maximum digits (3½ digits) displayed, the frequency decade dividers are provided in front of the counter gates. Thus, the counter gates receive the full scale frequency of 10 kHz, whether 10 MHz or 10 kHz range measurements, by dividing the sync amplifier output by 1000 or none.

The sweep board contains the necessary circuits for peak reading and low frequency measurement (less than 1 kHz range).

The output of the output amplifier is fed to four circuits: the output attenuator network, the dc voltage divider, and two rectifiers.

The dc voltage divider is used in the 0.1 Hz, 0.01 Hz and dc modes. The amplifier voltage is divided in half and fed directly to the absolute value circuit.

The minimum and maximum rectifiers use a trim cap in their divider circuits to compensate for high frequency roll-off. The 741 operational amplifier is a gain of one buffer, compensating for the voltage drop on the rectifying diode. At higher frequencies, the output from the buffer is a flat dc; at lower frequencies, the output tries to follow the input, but the waveform peaks are rectified enabling the sample and hold circuit to sample accurately. For the extreme low frequency, the sampled data is stored in digital form until the next sampling signal occurs. Thus, the inaccuracy caused by the discharging of capacitor in the sample and hold circuit is eliminated.

Pressing the MIN or MAX switch will connect the corresponding rectifier to the sample and hold circuit. The FET gate is pulsed once a cycle at the peak of a selected waveform and the capacitor is charged to the peak value.

The sampling sync pulse is controlled by the sync logic circuitry on the main board.

The WAVEFORM switch and FREQUENCY RANGE (Hz) switch will connect the dc divider output (dc, 0.01 Hz, 0.1 Hz) or the sample and hold output to the absolute value circuit. This circuit will invert a negative voltage, so the output is positive voltage. It also generates the polarity indicator for the display logic circuit on the main board.

When the instrument is in the minimum or maximum position, the output of the absolute value circuit is connected to the voltage to frequency converter. The voltage to frequency circuit gives an output of 10 kHz for an input of +5.00 volts. In the frequency position, the output from the GCV amplifier is fed to the voltage to frequency converter. The GCV is scaled to give an output of +5.00 volts to the maximum frequency of the range, when adjusted.

The waveform clipping detector is a simple voltage limit detector whose input is set to approximately ±7.6 volts. If the limit is exceeded, the signal is sent to the display logic and the display will indicate the condition by blinking the data readout (whatever is displayed).

SECTION 4
MAINTENANCE

4.1 ACCESS INSTRUCTIONS

The Model 147 is packaged so that it can be quickly disassembled to afford access to the majority of components within the unit, while allowing the instrument to be operated.

4.1.1 Removing the Dust Cover

To remove the dust cover (case) from the Model 147, the following procedure should be followed:

1. Unplug the ac line cord and unscrew the four captive screws on the rear panel.

2. Remove the rear panel and power supply.

3. Unplug power supply connector from power supply board. Slide dust cover off slowly.

4. At this time, the power supply can be remounted and the Model 147 may be operated normally.

4.1.2 Disassembly for Troubleshooting or Repair

1. Complete Steps 1 through 3 of Paragraph 4.1.1.

2. Remove the six screws which hold the main board in place.

3. Remove the top row of knobs off the front panel by pulling on them slowly.

4. To remove the main board, have the front panel facing you. Place your finger between the two boards at the connectors and lift the top connectors up until they come free of the pins. With the back of the board slightly raised, carefully slide the control shafts out of the front panel.

CAUTION

THE SWEEP BOARD (BOTTOM BOARD) MUST BE SUPPORTED WHILE PUSHING THE CONNECTOR ONTO THE PINS.

CAUTION

5. To put the main board in the maintenance position (see Figure 4-1), stand the main board up and slowly lower it onto the pin.

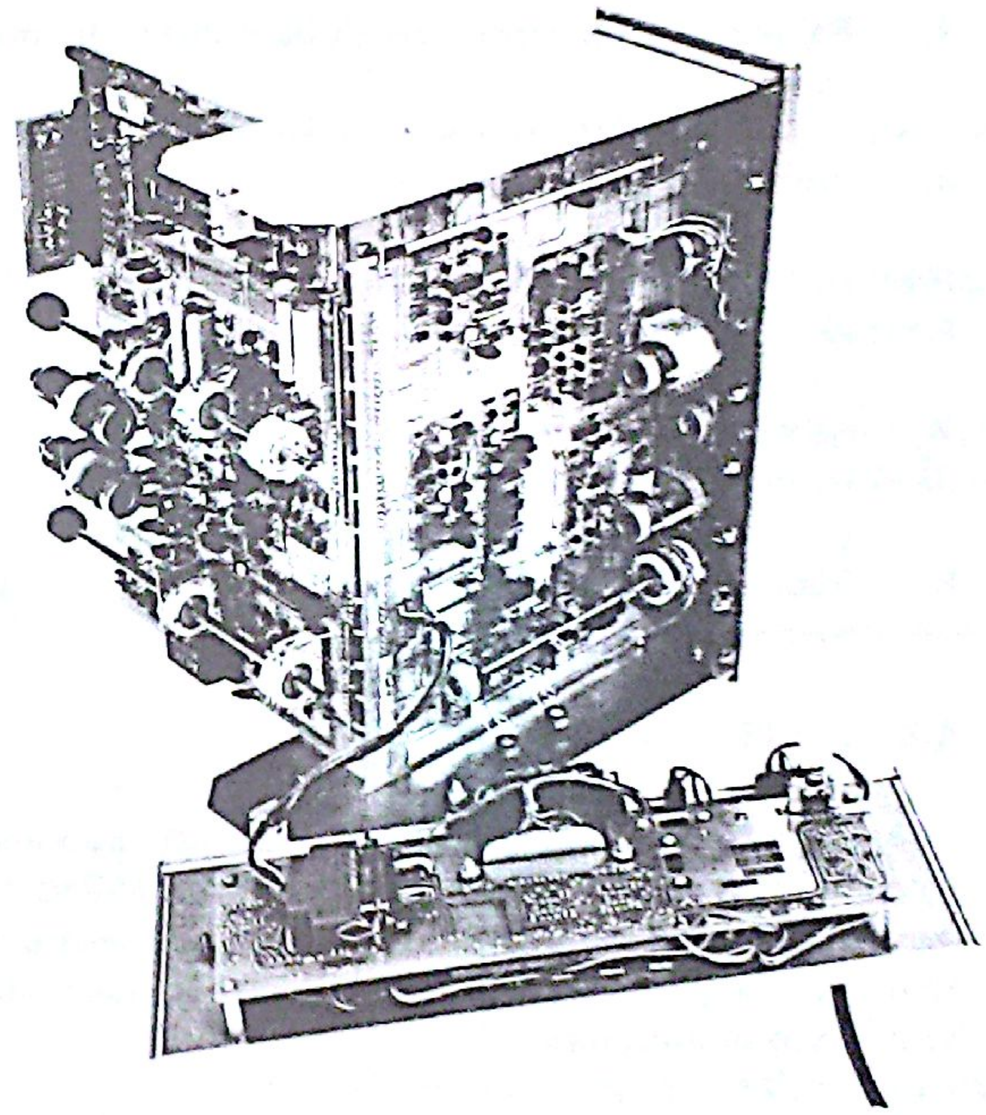

Figure 4-1. Model 147 in the Maintenance Position

6. Plug the power supply connector into the power supply board and plug in the ac line cord.

7. The power switch located on the power supply board will control the power to the instrument while in this configuration.

4.1.3 Reassembly Procedure

1. Turn off power switch on power supply board;unplug the ac line cord; and disconnect power connector from power supply.

2. Lift main board off connector pins.

3. With the back end of the main board slightly raised, guide the control shafts just into the front panel. Then lower the back and slide forward checking the three READOUT FUNCTION buttons. When they are through the front panel, raise the back and mate the pins and connector.

CAUTION

THE SWEEP BOARD (BOTTOM BOARD) MUST BE SUPPORTED WHILE PUSHING THE CONNECTOR ONTO THE PINS.

CAUTION

---

4. Replace the six screws which hold down the main board.

5. Replace knobs on front panel.

6. Slide the dust cover on slowly, making sure it is seated into the groove on the front panel.

7. Reconnect the power supply connector to the power supply board.

8. Replace the rear panel and power supply; tighten the four captive screws.

4.2 CALIBRATION INSTRUCTIONS

This paragraph provides complete sequential calibration instructions for this instrument. The instructions are concise and are written for the experienced electronics technician or field engineer having a working knowledge of this type of instrument.

WAVETEK maintains a factory repair department for those customers not possessing the necessary test equipment or personnel to maintain this type of instrument. If an instrument is returned to the factory for calibration or repair, a detailed description of the specific problem should be attached. This will hasten turnaround time.

4.2.1 Preliminary Procedures

1. Complete precalibration checkout procedure as necessary.

2. Perform the following front panel settings:

FREQUENCY CONTROL	fully cw
READOUT FUNCTION	FREQ
FREQUENCY RANGE (Hz)	1K
SYMMETRY	OFF
SYMMETRY VARIABLE	fully ccw
DC OFFSET	OFF
DC OFFSET VARIABLE	fully ccw
WAVEFORM	∧∨
MODE	CONT
TRIG LEVEL	fully ccw
SWEEP WIDTH	fully ccw
SWEEP TIME	OFF
SWEEP TIME VARIABLE	fully ccw
OUTPUT ATTEN (dB)	0
OUTPUT ATTEN (dB) VARIABLE	fully cw
POWER	depressed (ON)

3. Install the unit in the cover and allow 30 minutes warm-up time.

4.2.2 Power Supply Board

POWER SUPPLY REGULATION

1. Connect ac power to the instrument and connect the voltmeter leads to TP1 (common) and TP2 (+15 V) on the main board.

2. Adjust R10 (power supply board) for a reading of +15 Vdc ±20 mV on the voltmeter.

3. Check the voltage at TP3 for −15 Vdc ±50 mV, at TP4 for +24 Vdc ±400 mV, at TP5 for −24 Vdc ±400 mV, and at TP6 for +5 Vdc ±200 mV.

4.2.3 Main Board

TRIANGLE AMPLITUDE ADJUSTMENT

NOTE

Fold out Page 4-7 for calibration adjustment and test point locations.

1. Connect the oscilloscope probe (a peak reading plug-in module should be used with the scope) to (∧∨) TP7 (WAVEFORM selector wafer, yellow wire).

2. Adjust the triangle amplitude to ±1.25 V ±5 mV using R90 and R100.
R89

FREQUENCY AND TIME SYMMETRY CALIBRATION

1. Set FREQUENCY RANGE (Hz) to 100K, WAVEFORM selector to ⊓⊔ , FREQUENCY CONTROL fully ccw; and adjust R10 for approximately 1/1250 of full scale (80 Hz) and R22 for time symmetry within 1%.

2. Turn FREQUENCY CONTROL to 1/100 of full scale (1 kHz) and adjust R12 for minimum frequency shift while opening and shorting the VCG IN.

NOTE

If Step 2 cannot be accomplished, center R12 and repeat Step 1.

3. Turn FREQUENCY CONTROL fully cw, and adjust time symmetry within 0.1% with R23.

4. Repeat Steps 1 and 3 as necessary for accurate time symmetry at full scale to 1/1000 of full scale.

5. Turn FREQUENCY CONTROL fully cw, FREQUENCY RANGE (Hz) to 100K, and adjust R4 to obtain 105.0 kHz.

6. Set FREQUENCY RANGE (Hz) to 10M and adjust C17 to obtain an output frequency of 10.50 MHz.

7. Set FREQUENCY RANGE (Hz) to 1M and adjust C26 to obtain 1.050 MHz at the output.

8. Set FREQUENCY RANGE (Hz) to 10K and adjust R5 to obtain 10.50 kHz.

NOTE

1.050 in frequency equals 0.952381 in time.

9. Set FREQUENCY RANGE (Hz) to 1K and adjust R6 to obtain 1.050 kHz.

10. Set FREQUENCY RANGE (Hz) to 100 and adjust R7 to obtain 105.0 Hz.

11. Set FREQUENCY RANGE (Hz) to 10 and adjust R39 to obtain 10.50 Hz. (95.0 ms)

12. Adjust R66 for 0.1% time symmetry.

13. Readjust R39 for optimum frequency on 10, 1, 0.1, and 0.01 of FREQUENCY RANGE (Hz) selector.

14. Set FREQUENCY RANGE (Hz) to 10K, FREQUENCY CONTROL fully cw; and connect counter to SYNC OUT.

15. Adjust R235 to read same frequency on the readout as the counter (10.50 kHz). Note: R111 Adjusts Lower Range Readout

16. Connect DVM to pin 12; set FREQUENCY RANGE (Hz) to 1K; adjust FREQUENCY CONTROL for 1.000 on counter; adjust R47 for 5.00 V on DVM; adjust FREQUENCY CONTROL for 50 Hz on counter; adjust ~~R45~~ R43 for 0.25 V on DVM; and recheck for 5.00 V at 1.000 kHz.

Adjust For Nomainal 5V and 1000 on Readout

SINE DISTORTION AND AMPLIFIER ADJUSTMENTS

1. Set FREQUENCY RANGE (Hz) to 1K, FREQUENCY CONTROL fully cw, and WAVEFORM selector to ∿ .

2. Connect oscilloscope probes to (∿) TP7 (WAVEFORM selector wafer).

3. Adjust R149 so that the dc offset of the sine amplifier is zero.

4. Adjust R143, R139 and R140 for minimum sine wave distortion.

5. Set FREQUENCY RANGE (Hz) to 10K and readjust R143, R139 and R140 for optimum sine distortion.

6. Alternately perform Steps 4 and 5 until the least amount of sine wave distortion is obtained on both ranges (typically 0.14%).

7. Adjust R167 for a 2.5 V p-p ±5 mV sine wave.

8. Readjust R149 so that the dc offset of the sine wave amplifier is 0 V ±5 mV.

SQUARE WAVE AMPLITUDE ADJUSTMENT

1. Set WAVEFORM selector to ⊓ .

2. Adjust the square wave amplitude to ±1.25 V ±5 mV using R184 and R175.

4.2.4 Sweep Board

OUTPUT AMPLIFIER ADJUSTMENT

NOTE

Fold out Page 4-9 for calibration adjustment and test point locations.

1. With the 50Ω OUT connected to the oscilloscope using a 50Ω ±1% termination, set FREQUENCY RANGE (Hz) to 1K, FREQUENCY CONTROL fully cw, WAVEFORM selector to ∧∨ , OUTPUT ATTEN (dB) to 0, and OUTPUT ATTEN (dB) VARIABLE fully ccw.

2. Adjust R132 for amplitude symmetry about ground.

3. Set OUTPUT ATTEN (dB) VARIABLE fully cw and adjust R134 for 15 V p-p ±25 mV output amplitude.

HIGH FREQUENCY RESPONSE ADJUSTMENT

1. Set FREQUENCY RANGE (Hz) to 10M, FREQUENCY CONTROL to read 1 MHz and WAVEFORM selector to ⊓⊔ .

2. Adjust C81 for best square wave, without peaking, at full amplitude with 50Ω load.

3. Set WAVEFORM selector to ∿ and FREQUENCY CONTROL fully cw.

4. Adjust C53 (main board) to obtain approximately 15 V p-p output amplitude at full amplitude with 50Ω load.

5. If clipping occurs as waveforms are varied from 1M to 10M, readjust C53 to correct this occurrence.

VOLTAGE TO FREQUENCY CONVERTER ADJUSTMENTS

1. Connect counter to SYNC OUT; set FREQUENCY RANGE (Hz) to 1K; set FREQUENCY CONTROL fully cw.

2. Adjust R111 to match counter on 147 readout.

SAMPLE AND HOLD CIRCUIT ZERO

1. Set READOUT FUNCTION to PK AMPL MAX.

2. Ground the input (pin 27); connect a DVM to sample and hold output (pin 28).

3. Set R191 for 0.000 volt. Bottom Board

ABSOLUTE VALUE CIRCUIT

1. Adjust R237 for 0.00 volt at summing node of absolute value circuit (TP1).

2. Adjust R230 for 0.00 volt at output of absolute value circuit (pin 6).

3. Remove ground jumper on pin 27; set WAVEFORM selector to DC.

4. Connect 50Ω OUT to a 50Ω load and a DVM.

5. Use – DC OFFSET control to set 5.50 V to 6.00 V on the DVM; set the readout to match the DVM with R227.

6. Switch to + DC OFFSET; set the readout to match the DVM with R224.

7. Repeat Steps 5 and 6 until both + and – readings match the DVM.

RECTIFIER CALIBRATION

1. Set WAVEFORM selector to ∿ , DC OFFSET to OFF, FREQUENCY RANGE (Hz) to 100K.

2. Connect 50Ω OUT (loaded with 50Ω) to scope.

3. Use OUTPUT ATTEN (dB) VARIABLE to set a 14.00 V peak-to-peak waveform.

4. Select PK AMPL MAX; set the + peak waveform to exactly +7.00 V on the scope using a peak comparitor; and set the readout to +7.00 V with R217.

5. Select PK AMPL MIN; set the – peak waveform to exactly –7.00 V on the scope using a peak comparitor; and set the readout to –7.00 V with R206.

6. Set FREQUENCY RANGE (Hz) to 10M.

7. Set the – peak waveform to exactly –7.00 V on the scope; and set the readout to –7.00 V with C70.

8. Select PK AMPL MAX; set the + peak waveform to exactly +7.00 V on the scope; set the readout to +7.00 V with C74.

9. Repeat Steps 4 through 8 if necessary.

NOTE

The peak comparitor should not be used to check voltmeter settings above 100 kHz.

SWEEP/GCV ADJUSTMENTS

1. Set FREQUENCY RANGE (Hz) to 1K and connect oscilloscope to the sweep output (TP13).

2. Adjust R21 to set the output to 0 ±5 mV.

3. Set SWEEP TIME selector to 0.1 s/10 ms and the SWEEP TIME VARIABLE fully cw.

4. Adjust R46 to set the lower peak of the sawtooth wave for 0 V (+0, −5 mV) and R238 to set the upper peak of the sawtooth wave for +5 V ±20 mV at the SWP/GCV OUT connector (unloaded).

5. Reset R46 to assure at least 1000:1 operation in the SWP/HOLD MODE.

TRIGGER BASELINE ADJUSTMENT

1. Set MODE selector to TRIG, FREQUENCY RANGE (Hz) to 10K, FREQUENCY CONTROL fully cw, DC OFFSET to OFF, WAVEFORM selector to ∧∨, OUTPUT ATTEN (dB) to 0, and OUTPUT ATTEN (dB) VARIABLE fully cw.

2. Adjust R84 for 0 V ±20 mV and 50Ω OUT (loaded with 50Ω).

3. Set FREQUENCY CONTROL fully ccw and adjust R60 to set baseline to 0 V ±20 mV.

4. Check that the baseline remains within ±50 mV at all frequency settings.

SYMMETRY ADJUSTMENT

1. Set FREQUENCY RANGE (Hz) to 1K, MODE to CONT, FREQUENCY CONTROL fully cw.

2. Adjust R20 for 1/10 of reading from SYMMETRY switch OFF to SYMMETRY switch ⟋ or ⟋.

READOUT ZERO FLICKER ADJUSTMENT

1. Set SYMMETRY switch to OFF, FREQUENCY CONTROL fully ccw.

2. Adjust R191 until no flicker is seen in the blanked out decimal points and zeros. Top Board

4.2.5 Post Operational Checkout

1. Check the MODE switch, SYMMETRY switch and SYMMETRY VARIABLE, WAVEFORM switch, SWEEP WIDTH potentiometer, SWEEP TIME switch and SWEEP TIME VARIABLE, and OUTPUT ATTEN (dB) switch and OUTPUT ATTEN (dB) VARIABLE for proper operation.

2. Verify that the readout functions properly in all functions of the READOUT FUNCTION controls at all frequency ranges.

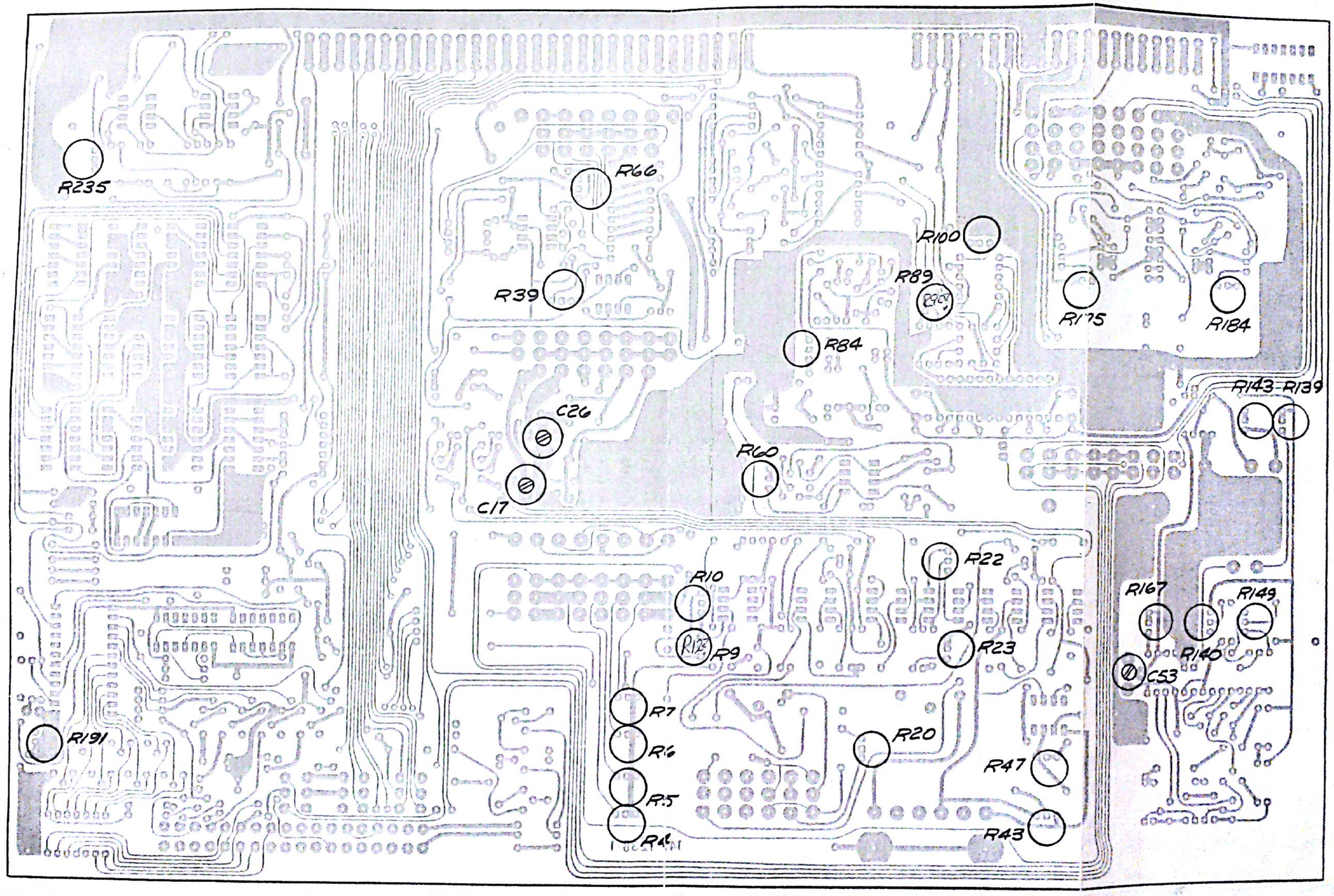

147-010 MAIN BOARD CALIBRATION POINTS.

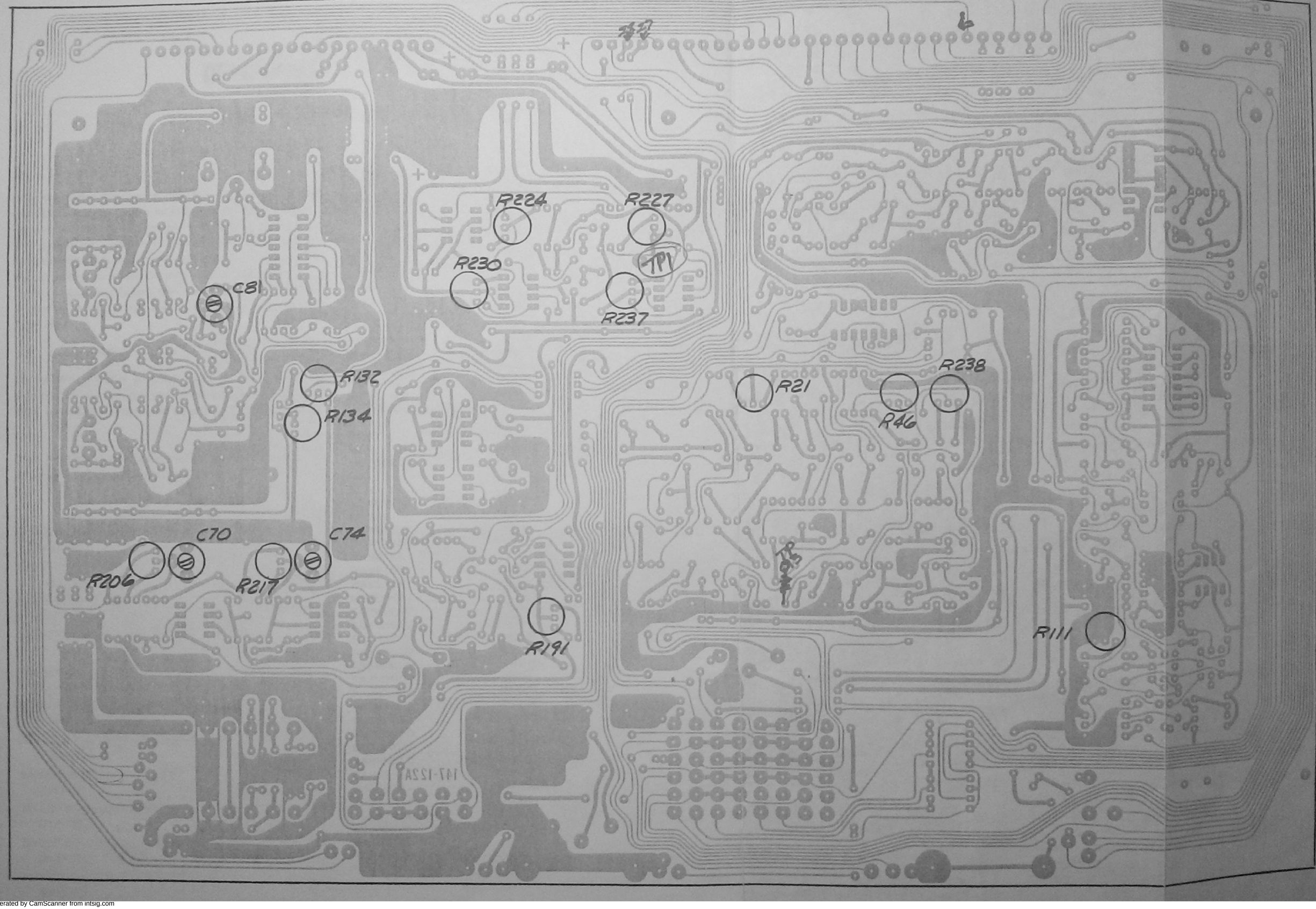

147-011 SWEEP BOARD CALIBRATION POINTS.

SECTION 5
DIAGRAMS ADDENDUMS AND PARTS LISTS

5.1 DIAGRAMS

The schematic diagrams within this manual are, wherever possible, arranged in the sequence followed in the circuit description. Whenever assembly drawings are included, they are positioned adjacent to the schematics for maximum information presentation and minimum page flipping. Additional voltage or waveform information, beyond that given in the circuit description, may be shown on the schematic diagrams, at test points and key locations throughout the instrument.

5.2 ADDENDUMS

Under WAVETEK's product improvement program, the latest electronic designs and circuits are incorporated into each WAVETEK instrument as quickly as development and testing permit. Because of the time needed to compose and print instruction manuals, it is not always possible to include the most recent changes in the initial printing. Whenever this occurs, addendum pages are prepared to summarize the changes made under a WAVETEK Engineering Change Notice (ECN) and these ECN pages are inserted immediately inside the rear cover. If no such pages exist, the manual should be correct as printed.

5.3 PARTS LISTS

Whenever possible, an assembly drawing and the associated parts list are kept to one piece of paper or are positioned for maximum information presentation. When ordering spare parts, please specify part number, circuit reference, board, serial number of unit, and if applicable, the function performed.

DRAWINGS

The following assembly drawings (with parts lists) and schematics will be included at the rear of this manual, in the arrangement shown below:

LEFT PAGE

CHASSIS ASSEMBLY
D147-000 1 of 2
CHASSIS SCHEMATIC
D147-200
MAIN BOARD ASSEMBLY
D147-023 1 of 4
MAIN BOARD ASSEMBLY
D147-023 3 of 4
MAIN BOARD SCHEMATIC
D147-223 1 of 4
MAIN BOARD SCHEMATIC
D147-223 3 of 4
READOUT BOARD ASSEMBLY
D147-021
SWEEP BOARD ASSEMBLY
D147-022 1 of 4
SWEEP BOARD ASSEMBLY
D147-022 3 of 4
SWEEP BOARD SCHEMATIC
D147-222 1 of 2
POWER SUPPLY BOARD ASSEMBLY
D147-020 1 of 2
POWER SUPPLY BOARD SCHEMATIC
D147-220

RIGHT PAGE

CHASSIS ASSEMBLY
D147-000 2 of 2
REAR PANEL ASSEMBLY
D147-001
MAIN BOARD ASSEMBLY
D147-023 2 of 4
MAIN BOARD ASSEMBLY
D147-023 4 of 4
MAIN BOARD SCHEMATIC
D147-223 2 of 4
MAIN BOARD SCHEMATIC
D147-223 4 of 4
READOUT BOARD SCHEMATIC
D147-221
SWEEP BOARD ASSEMBLY
D147-022 2 of 4
SWEEP BOARD ASSEMBLY
D147-022 4 of 4
SWEEP BOARD SCHEMATIC
D147-222 2 of 2
POWER SUPPLY BOARD ASSEMBLY
D147-020 2 of 2

5.4 RECOMMENDED SPARE PARTS LIST

Information is provided to maintain the instrument on a board or component level. Price and delivery information should be obtained from the Wavetek representative in your area or directly from the factory.

DESCRIPTION	MFG	PART NO.	QTY
BOARD LEVEL			
COMPLETE REAR PANEL ASSEMBLY	WAVETEK	147-001	1
READOUT BOARD	WAVETEK	147-021	1
SWEEP BOARD	WAVETEK	147-022	1
MAIN BOARD	WAVETEK	147-023	1
COMPONENT LEVEL			
DIODE TUNNEL	GE	1N3716	1
DIODE	SEMTECH	SCE-1	2
DIODE	FAIRCHILD	FD777	5
*DIODE SET	WAVETEK	142-501-58	1
DIODE	HEWLETT-PACKARD	HP-2811	3
DIODE	FAIRCHILD	FD666	5
DIODE ZENER	WAVETEK	130-506	2
FUSE 1/2A 115 V	LITTELFUSE	313-500	2
FUSE 1/2A 230 V	LITTELFUSE	313-250	2
INTEGRATED CIRCUIT	FAIRCHILD	7805	1
INTEGRATED CIRCUIT	FAIRCHILD	μM741C	5
INTEGRATED CIRCUIT	NAT SEMI-CONDUCTOR	LM-301	1
INTEGRATED CIRCUIT	RCA	CA3028A	1
INTEGRATED CIRCUIT	RCA	CA3030	1
INTEGRATED CIRCUIT	RCA	CA3049	1
INTEGRATED CIRCUIT	MOTOROLA	MC-3050	1
INTEGRATED CIRCUIT	RCA	CA3054	1
INTEGRATED CIRCUIT	RCA	CA3080	2
INTEGRATED CIRCUIT	MOSTEK	5005 P	1
LED	OPCOA	OSL-6L-1	2
LED READOUT	FAIRCHILD	FND 70	1
LED READOUT	FAIRCHILD	FND 71	1
*TRANSISTOR SET	WAVETEK	142-501-52	1
*TRANSISTOR SET	WAVETEK	142-501-53	1
*TRANSISTOR SELECTED	WAVETEK	142-501-55	2
TRANSISTOR	MOTOROLA	2N2219A	2
TRANSISTOR	FAIRCHILD	2N2905A	2
TRANSISTOR	FAIRCHILD	2N3563	1
TRANSISTOR	FAIRCHILD	2N3565	5
TRANSISTOR	FAIRCHILD	2N3638	1
TRANSISTOR	FAIRCHILD	2N3638A	5
TRANSISTOR	FAIRCHILD	2N3640	5
TRANSISTOR	FAIRCHILD	2N3642	1
TRANSISTOR	FAIRCHILD	2N3646	10
TRANSISTOR	FAIRCHILD	2N4248	1
TRANSISTOR	FAIRCHILD	2N5139	5
TRANSISTOR	MOTOROLA	2N5485	1
TRANSISTOR	FAIRCHILD	2N4047	1
TRANSISTOR	FAIRCHILD	2N5160	1
TRANSISTOR	MOTOROLA	MPS LO8	2
TRANSISTOR	TECH PROD	TD308	1
TRANSISTOR	TECH PROD	TD401	1
TRANSISTOR	SILICONIX	U233	1
TRANSISTOR	NATIONAL	NF-510	1
TRANSISTOR	TEXAS INST	TIP 29	2
TRANSISTOR	TEXAS INST	TIP 30	2

*Denotes special selected parts and should be ordered from Wavetek.

REV	ECN	BY	DATE	APP
A	764	BC	9/9/78	

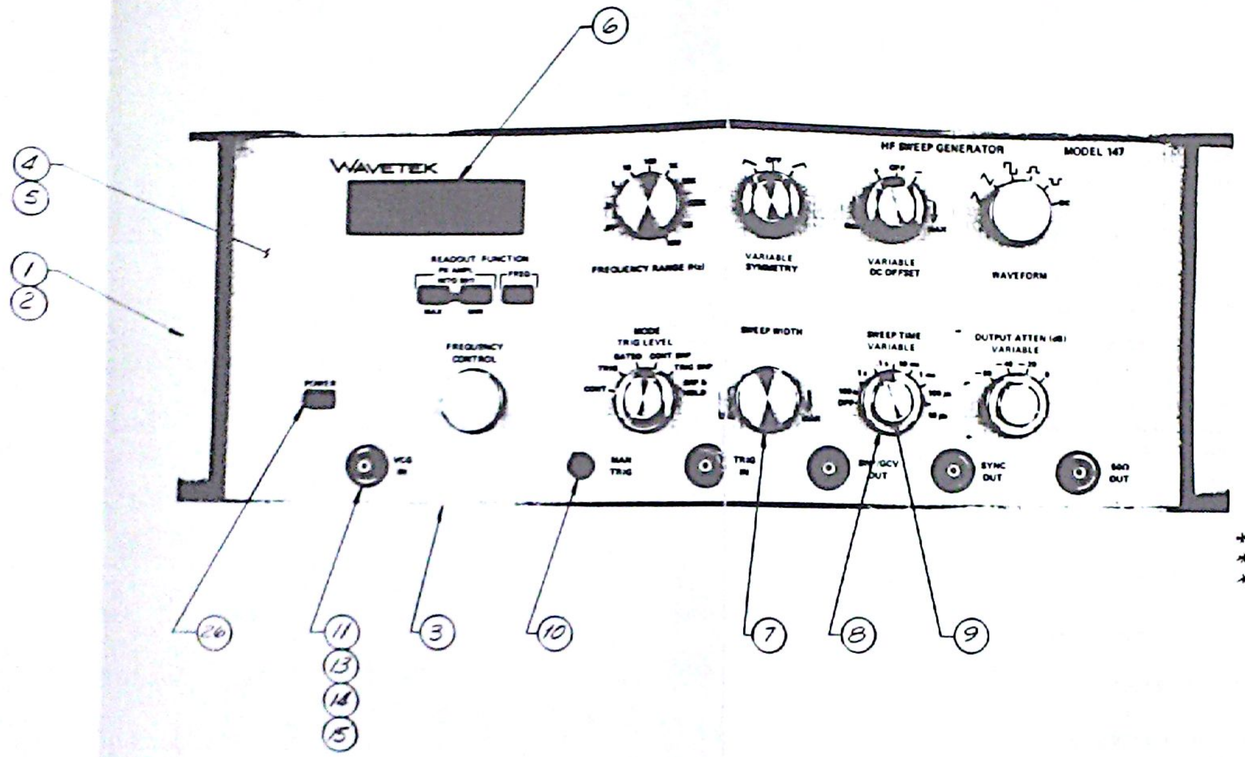

PARTS LIST					
LINE NO	DESCRIPTION	MFGR	FSCM	MFGR P/N	QTY
1	HANDLE TRIM (MADE FROM B147-333)	WAVETEK	23338	B147-345	2
2	HANDLE (MADE FROM C147-315)	WAVETEK	23338	C147-342	2
3	TRIM (MADE FROM B147-313)	WAVETEK	23338	B147-317	2
4	SUB PANEL	WAVETEK	23338	C147-301	1
5	FRONT PANEL	WAVETEK	23338	C147-300	1
6	READOUT WINDOW	WAVETEK	23338	B147-350	1
7	KNOB	WAVETEK	23338	B130-314	4
8	KNOB, COAX	WAVETEK	23338	B130-309	5
9	KNOB, SMALL	WAVETEK	23338	B130-354	5
10	SWITCH (MOMENTARY)	C + K	09353	7108 PDCN	1
11	BNC CONNECTOR	KING	91836	KC 7946	5
12	CLAMP (MADE FROM A147-316)	WAVETEK	23338	A147-354	4
13	SHOULDER WASHER	H H SMITH	83330	2668	5
14	FLAT WASHER	H H SMITH	83330	2264	5
15	SOLDER LUG	H H SMITH	83330	1497	5
16	SWEEP BD	WAVETEK	23338	D147-022	1
17	MAIN BD	WAVETEK	23338	D147-023	1
18	READOUT BD	WAVETEK	23338	D147-021	1
19	SIDE PLATE	WAVETEK	23338	D147-355	2
20	SUPPORT BAR	WAVETEK	23338	B147-347	1
21	SWAGE NUTS	SOUTHCO	94222	74-11-20-13	4
22	REAR PANEL (POWER SUPPLY)	WAVETEK	23338	D147-001	1
* 23	COVER	WAVETEK	23338	C147-307	1
* 24	BAIL KIT (WITH FEET)	WAVETEK	23338	B147-505	1
* 25	COVER SUPPORT (MADE FROM A130-335)	WAVETEK	23338	B147-365	1
26	PUSH BUTTON (RED)	CRL	91590	J52305 RED	1
27	CHASSIS BLOCKS	USECO	88245	15918-11	4
28	WASHER	H H SMITH	83330	4L2FF	9
29	SHOULDER WASHER	HH SMITH	83330	2661	2
30					
31					
32					
33					
34					
35					

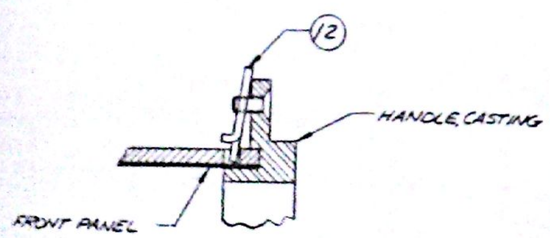

NOTE: BEFORE CLAMPING HANDLE CASTING (2) IN PLACE THE TRIM (TOP & BOTTOM) & PANELS MUST BE IN PLACE

HANDLE DETAILS

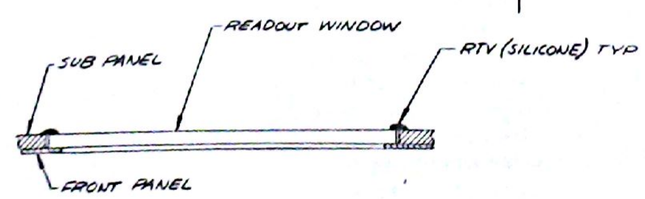

READOUT WINDOW DETAIL

* INDICATES ITEMS NOT SHOWN

REMOVE ALL BURRS AND BREAK SHARP EDGES	DRAWN BOCHICHIO	DATE 9-28-78	WAVETEK SAN DIEGO • CALIFORNIA
MATERIAL	ENGINEER		TITLE ASSEMBLY CHASSIS
	RELEASED APPROVED 9-28-78		
FINISH WAVETEK PROCESS	TOLERANCE UNLESS OTHERWISE SPECIFIED XXX ±.010 ANGLES ±1 XX ±.030		
	DO NOT SCALE DWG		MODEL NO 147 / DWG NO D147-000 / REV A
	SCALE		CODE IDENT 23338 / SHEET 1 OF 2

REV	ECN	BY	DATE	APP

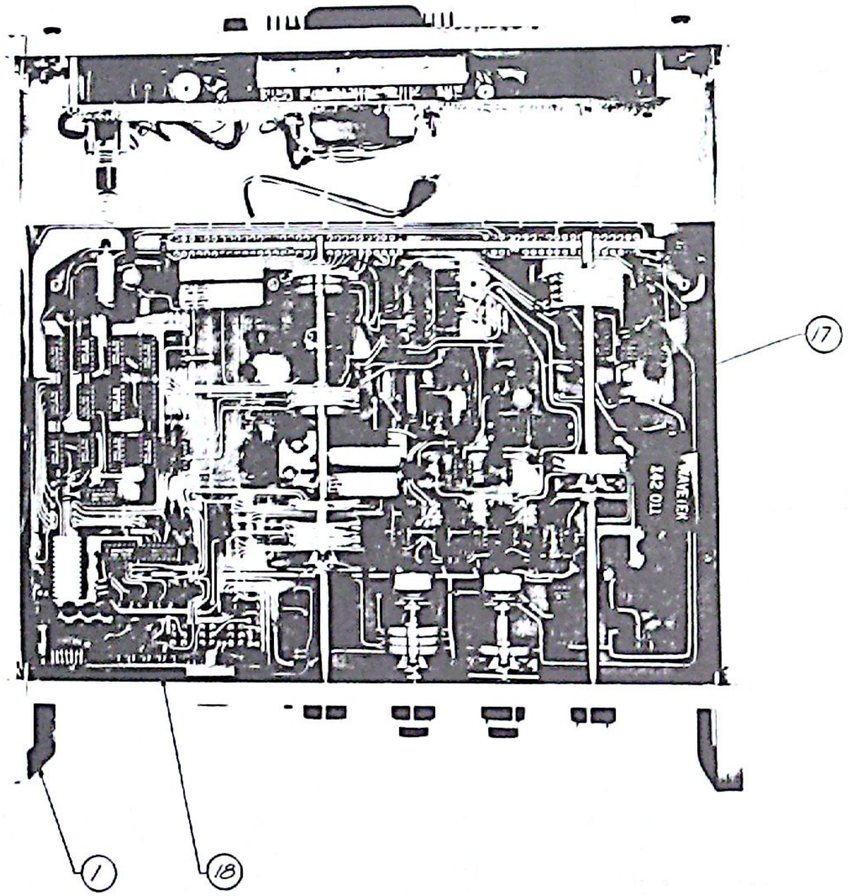

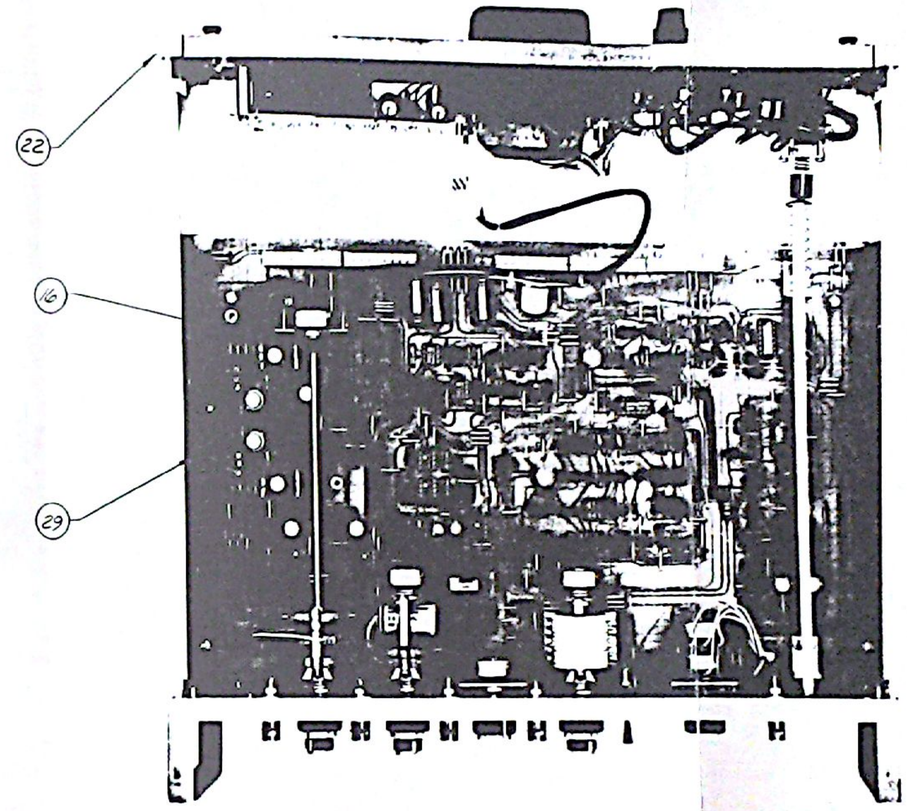

NOTE UNLESS OTHERWISE SPECIFIED

REMOVE ALL BURRS AND BREAK SHARP EDGES	DRAWN BOCHKHO	DATE 9-27-79	WAVETEK SAN DIEGO • CALIFORNIA
MATERIAL	FINISH ENGR		TITLE ASSEMBLY CHASSIS
	RELEASE	9-28-79	
FINISH WAVETEK PROCESS	TOLERANCE UNLESS OTHERWISE SPECIFIED .XX ±.010 .XX ±.030 ANGLES ±1		
	DO NOT SCALE DWG		MODEL NO 147 / DWG NO D147-000 / REV A
	SCALE		CODE IDENT NO 23338 / SHEET 2 OF 2

REV	ECN	BY	DATE	APP
A	764			

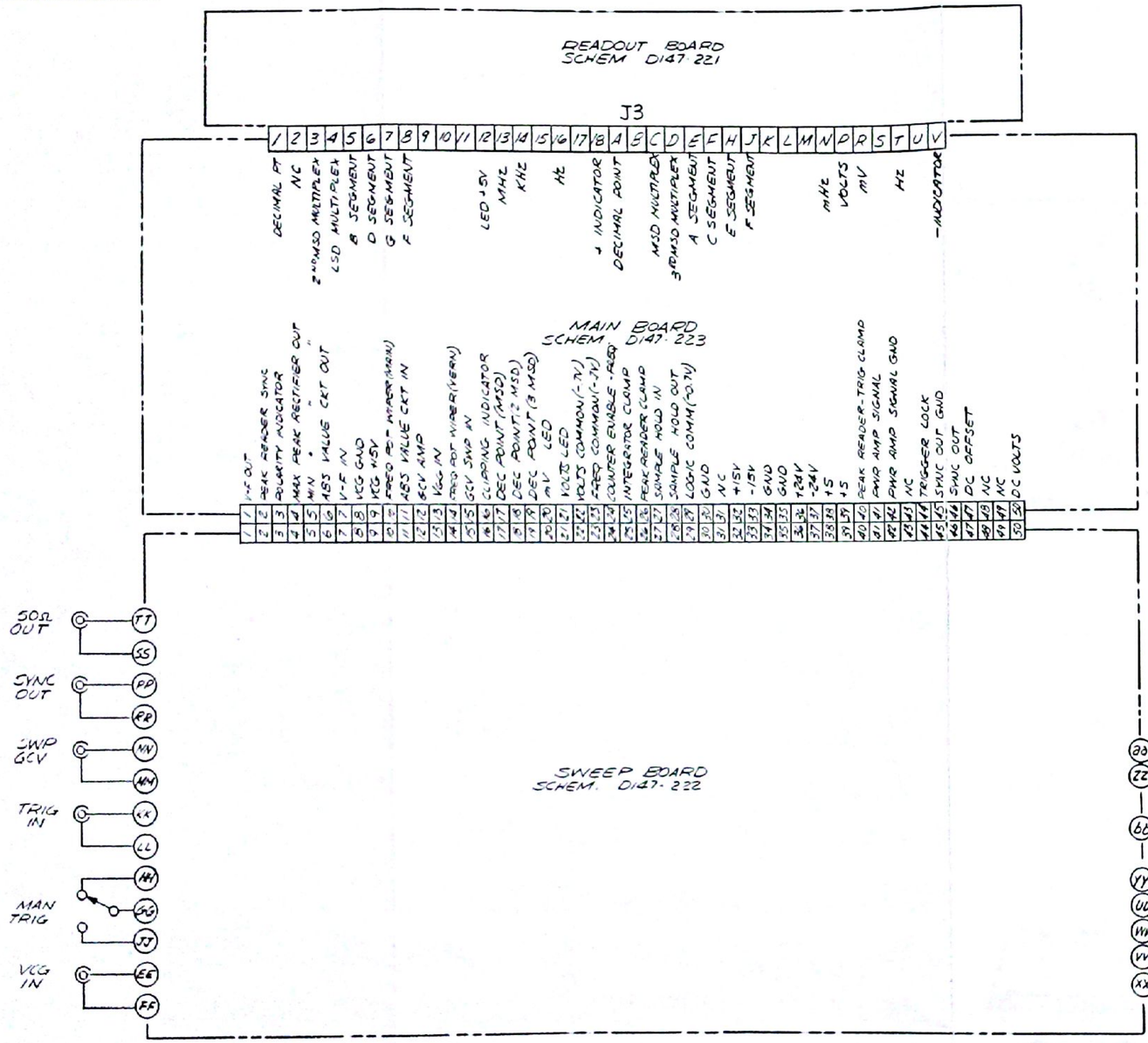

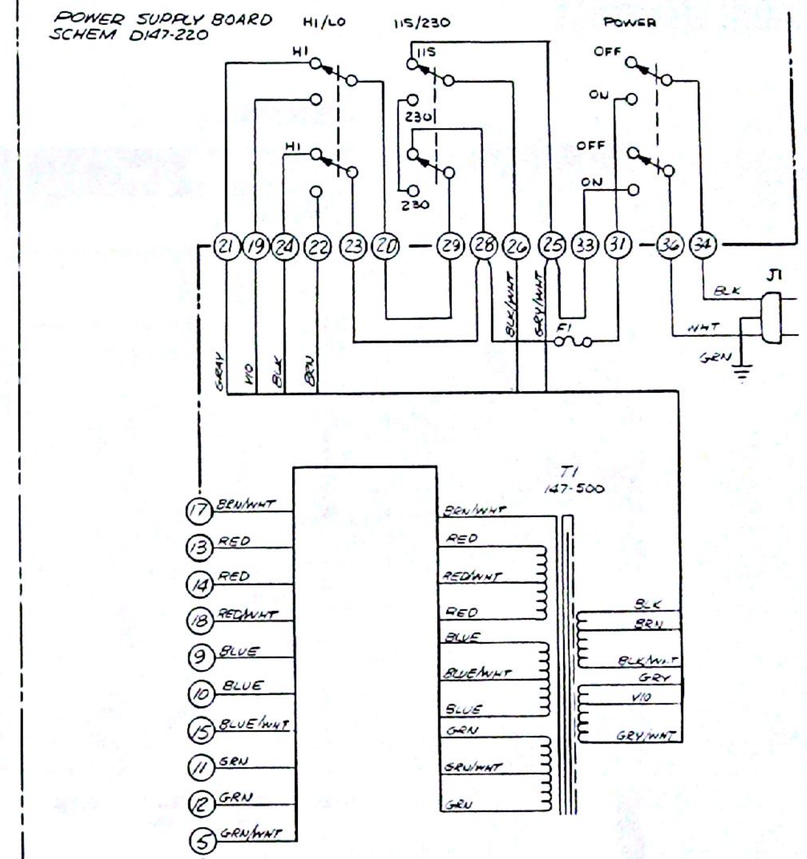

NOTE: UNLESS OTHERWISE SPECIFIED

REMOVE ALL BURRS AND BREAK SHARP EDGES	DRAWN Bocnicnio	DATE 9/6/73
MATERIAL	PROJ ENGR	
	RELEASE APPROV	
FINISH WAVETEK PROCESS	TOLERANCE UNLESS OTHERWISE SPECIFIED .XXX ±.010 ANGLES ±1 .XX ±.030	
	DO NOT SCALE DWG	
	SCALE	

WAVETEK SAN DIEGO, CALIFORNIA

TITLE: SCHEMATIC CHASSIS

MODEL NO	DWG NO	REV
147	D147-200	A
CODE IDENT 23338	SHEET 1 OF 1	

REV	ECN	BY	DATE	APP

PARTS LIST

LINE NO	DESCRIPTION	MFGR	FSCM	MFGR P/N	QTY
1	CAPACITORS				
2	CERAMIC DISC 50V .01uf	CRL	71590	CK103	4
3	CERAMIC DISC 20V .1uf	CRL	71590	UK20-104	7
4	CERAMIC DISC 50V .1uf	CRL	71590	CK104	2
5	ELECTROLYTIC 50V 50uf	SPRAGUE	56289	500D506G050DD7	2
6	ELECTROLYTIC 16V 250uf	SPRAGUE	56289	500D257G016DF7	3
7	ELECTROLYTIC 50V 500uf	SPRAGUE	56289	39D507G050GL4	2
8	ELECTROLYTIC 35V 1000uf	SPRAGUE	56289	39D108G035GL4	2
9	ELECTROLYTIC 15V 1900uf	SPRAGUE	56289	39D198G015GL4	1
10	CERAMIC DISC 33PF	CRL	71590	DD - 330	1
11					
12	DIODES SCE-1	SEMTECH	14099	SCE-1	10
13	ZENER	WAVETEK	23338	A130-506	1
14					
15					
16					
17	INTEGRATED CIRCUITS 741	FAIRCHILD	33888	uM741C	4
18	INTEGRATED CIRCUITS 7805	FAIRCHILD	33888	7805393	1
19					
20					
21	TRANSISTORS 2N3642	FAIRCHILD	33888	2N3642	6
22	TRANSISTORS 2N4248	FAIRCHILD	33888	2N4248	6
23	TRANSISTORS TIP-29	TEXAS INST.	01295	TIP-29	2
24	TRANSISTORS TIP-30	TEXAS INST.	01295	TIP-30	2
25					
26					
27					
28					
29					
30					
31					
32					

PARTS LIST

LINE NO	DESCRIPTION	MFGR	FSCM	MFGR P/N	QTY
33	RESISTORS				
34	CARBON 1/2W 5% 3.9Ω	STACKPOLE	29604	RC20GF3R9J	2
35	CARBON 1/2W 5% 4.7Ω	STACKPOLE	29604	RC20GF4R7J	2
36	METALFILM 1/8W 1% 464Ω	CORNING	16299	RN55D	2
37	METALFILM 1/8W 1% 681Ω	CORNING	16299	RN55D	2
38	METALFILM 1/8W 1% 825Ω	CORNING	16299	RN55D	2
39	METALFILM 1/8W 1% 2.21K	CORNING	16299	RN55D	4
40	METALFILM 1/8W 1% 2.74K	CORNING	16299	RN55D	2
41	METALFILM 1/8W 1% 2.87K	CORNING	16299	RN55D	1
42	METALFILM 1/8W 1% 3.92K	CORNING	16299	RN55D	1
43	METALFILM 1/8W 1% 4.75K	CORNING	16299	RN55D	7
44	METALFILM 1/8W 1% 5.76K	CORNING	16299	RN55D	2
45	METALFILM 1/8W 1% 6.19K	CORNING	16299	RN55D	1
46	METALFILM 1/8W 1% 8.25K	CORNING	16299	RN55D	1
47	METALFILM 1/8W 1% 9.09K	CORNING	16299	RN55D	2
48	METALFILM 1/8W 1% 9.53K	CORNING	16299	RN55D	2
49	METALFILM 1/8W 1% 10K (-64)	CORNING	16299	RN55D	2
50	METALFILM 1/8W 1% 18.2K	CORNING	16299	RN55D	2
51	METALFILM 1/8W 1% 38.3K	CORNING	16299	RN55D	2
52	POTENTIOMETER 1K	BECKMAN	80740	91AR1K	1
53					
54	PUSH BUTTON (RED)	CRL	71590	J52315(RED)	1
55	STANDOFFS	WAVETEK	23338	013-003-1	2
56	POWER SWITCH	WAVETEK	23338	157-422	1
57	CONNECTOR BLOCK	MOLEX		03-06-1091	1
58	CONNECTOR PINS	MOLEX		02-06-1132	9
59	SWITCH (115-230)	SWITCHCRAFT	82389	46256LF	1
60	SWITCH (HI - LO)	SWITCHCRAFT	82389	SW422-FT-HK	1
61	TRANSIDADS	MILTON ROSS	07047	10123N	8
62	BOARD	WAVETEK	23338	147-120	1
63	SOLDER GUARD	SWITCHCRAFT	82389	46256LF-SG	2
64					

LINE ITEM REFERENCE LIST

Ref. Desig	P/L Line	Ref. Desig	P/L Line	Ref. Desig	P/L Line	Ref. Desig	P/L Line
C1	8	IC1	17	R12	43		
C2	3	IC2	17	R13	35		
C3	3	IC3	17	R14	37		
C4	7	IC4	17	R15	51		
C5	2	IC5	18	R16	40		
C6	2			R17	39		
C7	5			R18	50		
C8	6			R19	43		
C9	9	Q1	23	R20	44		
C10	8	Q2	21	R21	48		
C11	3	Q3	21	R22	47		
C12	3	Q4	21	R23	36		
C13	6	Q5	23	R24	43		
C14	7	Q6	21	R25	39		
C15	2	Q7	21	R26	38		
C16	2	Q8	21	R27	34		
C17	5	Q9	24	R28	43		
C18	10	Q10	22	R29	49		
C19	3	Q11	22	R30	49		
C20	4	Q12	22	R31	43		
C21	3	Q13	34	R32	40		
C22	4	Q14	22	R33	51		
C23	3	Q15	22	R34	37		
C24	6	Q16	22	R35	35		
				R36	50		
				R37	39		
CR1	12			R38	43		
CR2	12		-	R39	48		
CR3				R40	44		
CR4	12	R1	43				
CR5	12	R2	34				
CR6	12	R3	38				
CR7	12	R4	39				
CR8	12	R5	47				
CR9	13	R6	36				
CR10	12	R7	42				
CR11	12	R8	41				
		R9	46				
		R10	52				
		R11	45				

NOTE UNLESS OTHERWISE SPECIFIED

REMOVE ALL BURRS AND BREAK SHARP EDGES	DRAWN Sakuchio	DATE 8/19	WAVETEK SAN DIEGO • CALIFORNIA
MATERIAL	PROJ ENGR		TITLE ASSEMBLY POWER SUPPLY
	RELEASE APPROV		
FINISH WAVETEK PROCESS	TOLERANCE UNLESS OTHERWISE SPECIFIED XXX ±.010 ANGLES ±1 XX ±.030		
	DO NOT SCALE DWG		MODEL NO 147 / DWG NO D147-020 / REV D
	SCALE		CODE IDENT NO 23338 / SHEET 2 OF 2

REV	ECN	BY	DATE	APP
B	761			

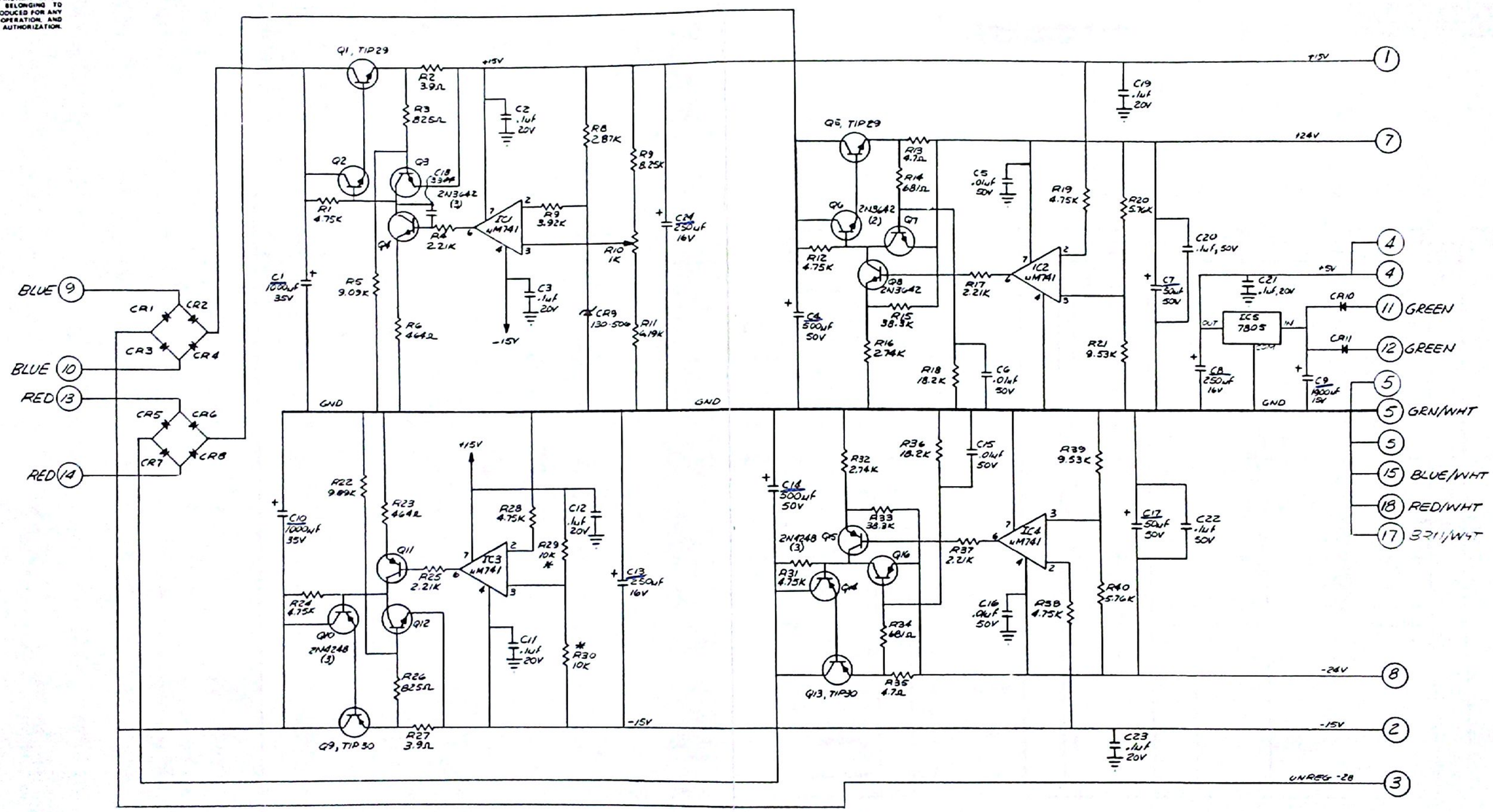

LAST DESIGNATORS USED		NOT USED
CAPACITOR	C24	
DIODE	CR11	
INTEGRATED CIRCUIT	IC5	
TRANSISTOR	Q16	
RESISTOR	R40	

1) COLORED CALLOUTS INDICATE TRANSFORMER LEADS
3) SEE CHASSIS SCHEMATIC D147-200 FOR INTERWIRING
2) DIODES ARE SCE-1
1) * INDICATES MATCHED PAIR (R29, R30)

NOTE UNLESS OTHERWISE SPECIFIED

REMOVE ALL BURRS AND BREAK SHARP EDGES	DRAWN DOCAMCHO	DATE 9/73	WAVETEK SAN DIEGO • CALIFORNIA
MATERIAL	PROJENGR		TITLE SCHEMATIC POWER SUPPLY BOARD
	RELEASE APPROV	9.5.73	
FINISH WAVETEK PROCESS	TOLERANCE UNLESS OTHERWISE SPECIFIED .XXX ±.010 .XX ±.030 ANGLES ±1		
	DO NOT SCALE DWG		MODEL NO 147 / DWG NO D147-220 / REV B
	SCALE		CODE IDENT 23338 / SHEET 1 OF 1

REV	ECN	BY	DATE	APP
A	ECN 765			

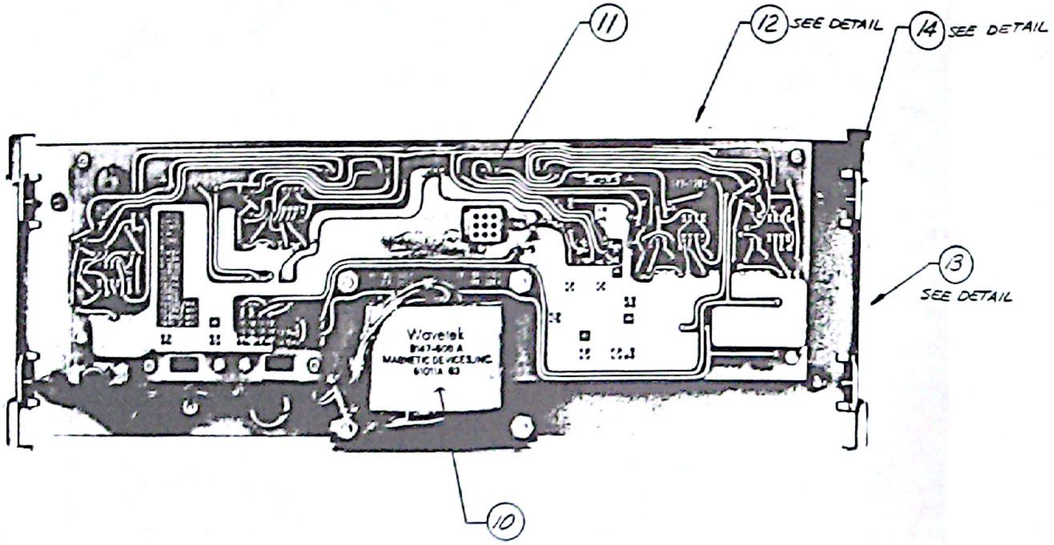

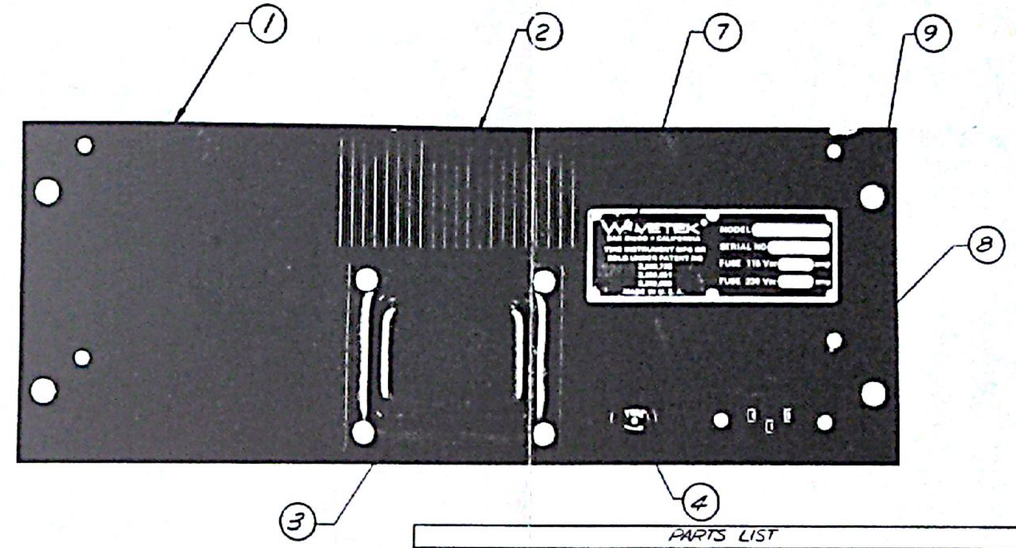

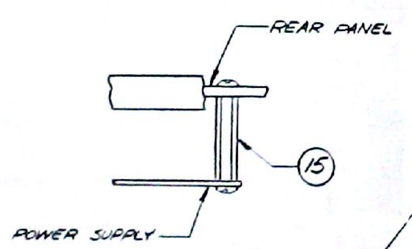

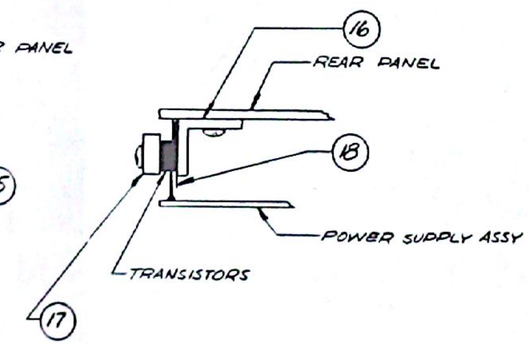

TRANSISTOR CLAMP DETAILS
SIDE VIEW

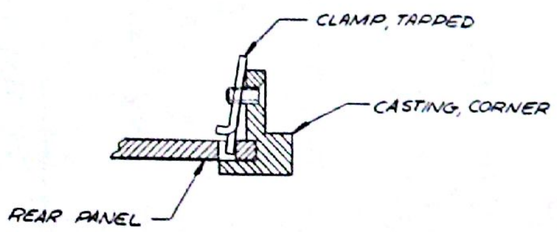

NOTE: BEFORE CLAMPING CORNER CASTINGS(2) IN PLACE TRIM (TOP & BOTTOM) MUST BE IN PLACE

CORNER TRIM DETAILS
TYP

1) FOR CHASSIS WIRING SEE CHASSIS SCHEMATIC D147-200

NOTE UNLESS OTHERWISE SPECIFIED

PARTS LIST

LINE NO	DESCRIPTION	MFGR	FSCM	MFGR P/N	QTY
1	REAR PANEL	WAVETEK	23338	C147-302	1
2	HEATSINK	WAVETEK	23338	B147-312	1
3	TRANSFORMER END BELL	WAVETEK	23338	A147-352	1
4	FUSE HOLDER	LITTELFUSE	75915	342012	1
5	FUSE 1/2 AMP (115V)	LITTELFUSE	75915	313.500	1
6	FUSE 1/4 AMP (230V)	LITTELFUSE	75915	313.250	1
7	NAMETAG (SERIAL NO)	WAVETEK	23338	B147-334	1
8	POWER CONNECTOR	SWITCHCRAFT	02389	EAC-301	1
9	CAPTIVE SCREWS	DEUTSCH	—	DKN7900-10-C-2	4
10	TRANSFORMER	WAVETEK	23338	B147-500	1
11	POWER SUPPLY BD ASSY	WAVETEK	23338	D147-020	1
12	TRIM (MADE FROM B147-313)	WAVETEK	23338	B147-317	2
13	CORNER CASTING (MADE FROM C147-340)	WAVETEK	23338	C147-341	2
14	CLAMPS TAPPED (MADE FROM A147-354)	WAVETEK	23338	A147-354	4
15	STANDOFFS	WAVETEK	23338	A201-333	4
16	BRACKET, POWER TRANS.	WAVETEK	23338	B147-351	1
17	CLAMPING BAR	WAVETEK	23338	B147-303	1
18	INSULATOR (TRANSISTOR)	WAVETEK	23338	B154-314	1
19					
20					
21					
22					
23					
24					
25					
26					
27					
28					

REMOVE ALL BURRS AND BREAK SHARP EDGES
MATERIAL
FINISH WAVETEK PROCESS
DRAWN BOUKNIG, M DATE 9-26-73
ENGINEER
RELEASE APPROVAL 9-28-73
TOLERANCE UNLESS OTHERWISE SPECIFIED XXX ±.010 ANGLES ±1 XX ±.030
DO NOT SCALE DWG
SCALE

WAVETEK SAN DIEGO • CALIFORNIA

TITLE ASSEMBLY, REAR PANEL (POWER SUPPLY)

MODEL NO 147 | DWG NO D147-001 | REV A

CODE IDENT 23338 | SHEET 1 OF 1

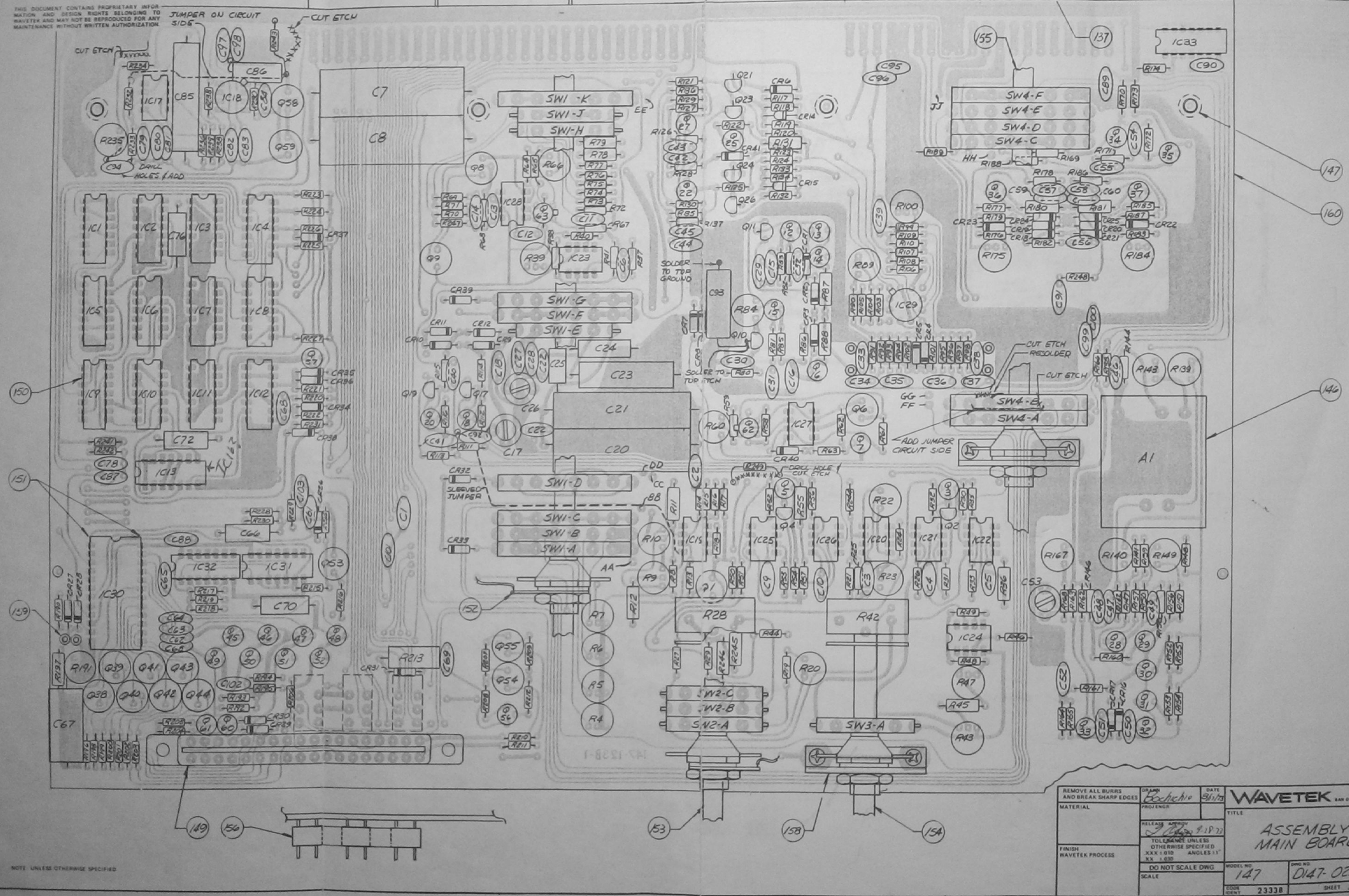

REV	ECN	BY	DATE	APP
B	764			

REMOVE ALL BURRS AND BREAK SHARP EDGES

MATERIAL

FINISH WAVETEK PROCESS

DRAWN Bochicchio DATE 9/1/73

PROJ ENGR

RELEASE APPROV 9/18/73

TOLERANCE UNLESS OTHERWISE SPECIFIED XXX ±.010 ANGLES ±1° XX ±.030

DO NOT SCALE DWG

SCALE

WAVETEK SAN DIEGO • CALIFORNIA

TITLE ASSEMBLY MAIN BOARD

MODEL NO 147

DWG NO D147-023 REV B

CODE IDENT 23338

SHEET 1 OF 4

NOTE: UNLESS OTHERWISE SPECIFIED

REV	ECN	BY	DATE	APP

PARTS LIST

LINE NO	DESCRIPTION	MFGR	FSCM	MFGR P/N	QTY
1	CAPACITOR				
2	CERAMIC DISC 1000V 15PF	CRL	71590	DD150	1
3	CERAMIC DISC 1000V 22PF	CRL	71590	DD220	1
4	SILVER MICA 500V 5% 30PF	ELMENCO	72136	DM15-300J	3
5	CERAMIC DISC 1000V 47PF	CRL	71590	DD470	1
6	SILVER MICA 500V 68PF	ELMENCO	72136	DM15-680J	2
7	CERAMIC DISC 500V 91PF	CRL	71590	DM-15-910	2
8	SILVER MICA 500V 100PF	ELMENCO	72136	DM15-101J	2
9	SILVER MICA 500V 150PF	ELMENCO	72136	DM15-151J	4
10	CERAMIC DISC 1000V 220PF	CRL	71590	DD221	1
11	CERAMIC DISC 1000V 330PF	CRL	71590	DD331	2
12	SILVER MICA 470PF	ELMENCO	72136	DM15-471J	1
13	SILVER MICA 820PF	ELMENCO	72136	DM15-821J	1
14	CERAMIC DISC 50V .005uF	CRL	71590	CK502	5
15	CERAMIC DISC 1000V .001uF	CRL	71590	DD102	3
16	CERAMIC DISC 50V .01uF	CRL	71590	CK103	20
17	CERAMIC DISC 20V .1uF	CRL	71590	UK20-104	28
18	POLYSTYRENE 200V 1% 1uF	ELECTROCUBE		21081C105F	1
19	MYLAR 100V 5uF	WAVETEK	23338	8146-505	1SET
20	TANTALIUM 10V 33uF	SPRAGUE	56289	150D336X9010B2	5
21	ELECTROLYTIC 50V 50uF	SPRAGUE	56289	500D506G050DD7	1
22	ELECTROLYTIC 16V 100uF	SPRAGUE	56289	500D107G016DC7	1
23	MATCHED SET 5uF	WAVETEK	23338	8146-504	1SET
24	MATCHED SET 1uF				REF
25	MATCHED SET 2uF				REF
26	MATCHED SET .01uF				REF
27	VARIABLE 7/35PF	STETNER		75-TRIKO-02-7/35	3
28	Ceramic Disc 1000V 470PF	CRL	71590	DD471	3
29					
30					
31					

PARTS LIST

LINE NO	DESCRIPTION	MFGR	FSCM	MFGR P/N	QTY
32					
33	DIODE FD777	FAIRCHILD	33888	FD777	8
34	DIODE MATCHED FD777	WAVETEK	23338	142-501-58	1PR
35	DIODE MATCHED FD6666	FAIRCHILD	33888	FD6666	23
36	DIODE MATCHED 1N3716	GENERAL ELECTRIC		1N3716	2
37	DIODE MATCHED HP2811	HEWLETT PACKARD		HP-2811	2
38	DIODE MATCHED ZENER	WAVETEK	23338	A130-506	3
39					
40					
41					
42	INTEGRATED CIRCUIT uA709	WAVETEK	23338	130-501-14	1
43	INTEGRATED CIRCUIT uM741	FAIRCHILD	33888	uM741C	11
44	INTEGRATED CIRCUIT CA3049	RCA	86684	CA3049	1
45	INTEGRATED CIRCUIT MK5005P	FAIRCHILD	33888	MK5005P	1
46	INTEGRATED CIRCUIT 7400	FAIRCHILD	33888	7400	2
47	INTEGRATED CIRCUIT 7402	FAIRCHILD	33888	7402	3
48	INTEGRATED CIRCUIT 7403	FAIRCHILD	33888	7403	1
49	INTEGRATED CIRCUIT 7404	FAIRCHILD	33888	7404	2
50	INTEGRATED CIRCUIT 7405	FAIRCHILD	33888	7405	1
51	INTEGRATED CIRCUIT 7474	FAIRCHILD	33888	7474	3
52	INTEGRATED CIRCUIT 7490	FAIRCHILD	33888	7490	4
53					
54					
55					
56					
57	TRANSISTORS L08	MOTOROLA	04713	MPSL08	4
58	TRANSISTORS TP308	TECHNICAL PRODUCTS		TP308	2
59	TRANSISTORS 2N3563	FAIRCHILD	33888	2N3563	1
60	TRANSISTORS (MATCHED) 2N3563	WAVETEK	23338	142-501-52	1PR
61	TRANSISTORS 2N3565	FAIRCHILD	33888	2N3565	9
62	TRANSISTORS 2N3638	FAIRCHILD	33888	2N3638	3

PARTS LIST

LINE NO	DESCRIPTION	MFGR	FSCM	MFGR P/N	QTY
63	TRANSISTORS 2N3638A	FAIRCHILD	33888	2N3638A	10
64	TRANSISTORS 2N3642	FAIRCHILD	33888	2N3642	3
65	TRANSISTORS 2N3646	FAIRCHILD	33888	2N3646	10
66	TRANSISTORS 2N4248	FAIRCHILD	33888	2N4248	1
67	TRANSISTORS 2N5139	FAIRCHILD	33888	2N5139	12
68	TRANSISTORS 2N5462	WAVETEK	23338	142-501-55	2
69	TRANSISTORS 2N5485	MOTOROLA	04713	2N5485	2
70	TRANSISTORS (MATCHED) 2N5485	WAVETEK	23338	142-501-53	1PR
71					
72					
73					
74					
75	RESISTORS				
76	CARBON 1/2W 5% 4.7Ω	STACKPOLE	29604	RC20GF4R7J	2
77	CARBON 1/2W 5% 8.2Ω	STACKPOLE	29604	RC20GF8R2J	4
78	METALFILM 1/8W 1% 100Ω	CORNING	16299	RN55D	4
79	METALFILM 1/8W 1% 21.5Ω	CORNING	16299	RN55D	6
80	METALFILM 1/8W 1% 33.2Ω	CORNING	16299	RN55D	5
81	METALFILM 1/8W 1% 46.4Ω	CORNING	16299	RN55D	6
82	METALFILM 1/8W 1% 56.2Ω	CORNING	16299	RN55D	3
83	METALFILM 1/8W 1% 82.5Ω	CORNING	16299	RN55D	2
84	METALFILM 1/8W 1% 90.9Ω	CORNING	16299	RN55D	2
85	METALFILM 1/8W 1% 100Ω	CORNING	16299	RN55D	8
86	METALFILM 1/8W 1% 124Ω	CORNING	16299	RN55D	11
87	METALFILM 1/8W 1% 150Ω	CORNING	16299	RN55D	1
88	METALFILM 1/4W 1% 196Ω	CORNING	16299	RN60D	1
89	METALFILM 1/8W 1% 249Ω	CORNING	16299	RN55D	4
90	METALFILM 1/8W 1% 274Ω	CORNING	16299	RN55D	2
91	METALFILM 1/8W 1% 316Ω	CORNING	16299	RN55D	5
92	METALFILM 1/8W 1% 332Ω	CORNING	16299	RN55D	3
93	METALFILM 1/8W 1% 464Ω	CORNING	16299	RN55D	1

NOTE UNLESS OTHERWISE SPECIFIED

REMOVE ALL BURRS AND BREAK SHARP EDGES

MATERIAL

FINISH WAVETEK PROCESS

DRAWN Bochichio DATE 9/20/84

PROJ ENGR

RELEASE APPROV

TOLERANCE UNLESS OTHERWISE SPECIFIED .XXX ±.010 ANGLES ±1 .XX ±.030

DO NOT SCALE DWG

SCALE

WAVETEK SAN DIEGO • CALIFORNIA

TITLE ASSEMBLY MAIN BOARD

MODEL NO 147

DWG NO D147-023

REV B

CODE IDENT NO 23338

SHEET 2 OF 4

REV	ECN	BY	DATE	APP

PARTS LIST

LINE NO	DESCRIPTION	MFGR	FSCM	MFGR P/N	QTY
94	CARBON 1W 5% 470Ω	STACKPOLE	29604	RC32GF	1
95	METALFILM 1/8W 1% 499Ω	CORNING	16299	RN55D	4
96	METALFILM 1/8W 1% 511Ω	CORNING	16299	RN55D	4
97	METALFILM 1/8W 1% 750Ω	CORNING	16299	RN55D	1
98	METALFILM 1/8W 1% 825Ω	CORNING	16299	RN55D	2
99	METALFILM 1/8W 1% 1K	CORNING	16299	RN55D	19
100	METALFILM 1/8W 1% 1.1K	CORNING	16299	RN55D	3
101	METALFILM 1/8W 1% 1.21K	CORNING	16299	RN55D	4
102	METALFILM 1/8W 1% 1.5K	CORNING	16299	RN55D	9
103	METALFILM 1/8W 1% 1.62K	CORNING	16299	RN55D	3
104	METALFILM 1/8W 1% 1.78K	CORNING	16299	RN55D	2
105	METALFILM 1/8W 1% 2.21K	CORNING	16299	RN55D	1
106	METALFILM 1/8W 1% 2.37K	CORNING	16299	RN55D	3
107	METALFILM 1/8W 1% 2.49K	CORNING	16299	RN55D	8
108	METALFILM 1/8W 1% 3.32K	CORNING	16299	RN55D	3
109	METALFILM 1/8W 1% 3.65K	CORNING	16299	RN55D	2
110	METALFILM 1/8W 1% 3.92K	CORNING	16299	RN55D	1
111	METALFILM 1/8W 1% 4.32K	CORNING	16299	RN55D	1
112	METALFILM 1/8W 1% 4.75K	CORNING	16299	RN55D	4
113	METALFILM 1/8W 1% 4.99K	CORNING	16299	RN55D	15
114	METALFILM 1/8W 1% 6.19K	CORNING	16299	RN55D	2
115	METALFILM 1/8W 1% 7.5K	CORNING	16299	RN55D	2
116	METALFILM 1/8W 1% 8.25K	CORNING	16299	RN55D	2
117	METALFILM 1/8W 1% 9.09K	CORNING	16299	RN55D	2
118	METALFILM 1/8W 1% 10K	CORNING	16299	RN55D	21
119	METALFILM 1/8W 1% 12.1K	CORNING	16299	RN55D	1
120	METALFILM 1/8W 1% 15K	CORNING	16299	RN55D	2
121	METALFILM 1/8W 1% 16.5K	CORNING	16299	RN55D	1
122	METALFILM 1/8W 1% 18.2K	CORNING	16299	RN55D	3
123	METALFILM 1/8W 1% 19.1K	CORNING	16299	RN55D	2
124	METALFILM 1/8W 1% 27.4K	CORNING	16299	RN55D	1

PARTS LIST

LINE NO	DESCRIPTION	MFGR	FSCM	MFGR P/N	QTY
125	METALFILM 1/8W 1% 69.8K	CORNING	16299	RN55D	1
126	METALFILM 1/8W 1% 100K	CORNING	16299	RN55D	1
127	METALFILM 1/4W 1% 464K	CORNING	16299	RN60D	1
128	METALFILM 1/4W 1% 1M	CORNING	16299	RN60D	2
129	CARBON 1/2W 5% 4.7M	STACKPOLE	29604	RC20GF475K	1
130	CARBON 1/2W 5% 6.8M	STACKPOLE	29604	RC20GF685K	2
131	MATCHED SET 1M	WAVETEK	23338	142-501-50	1SET
132	MATCHED SET 100K				REF
133	MATCHED SET 10K				REF
134	MATCHED SET 1K				REF
135					
136					
137	CONNECTOR	MOLEX		09523101	5
138	POTENTIOMETER 100Ω	BECKMAN	80740	91AR100	2
139	POTENTIOMETER 200Ω	BECKMAN	80740	91AR200	1
140	POTENTIOMETER 500Ω	BECKMAN	80740	91AR500	8
141	POTENTIOMETER 1K	BECKMAN	80740	91AR1K	4
142	POTENTIOMETER 2K	BECKMAN	80740	91AR2K	5
143	POTENTIOMETER 10K	BECKMAN	80740	91AR10K	2
144	POTENTIOMETER 100K	BECKMAN	80740	91AR100K	4
145	POTENTIOMETER 10K	WAVETEK	23338	146-R1	2
146	SINE MODULE	WAVETEK	23338	142-011	1
147	STANDOFFS (SWAGE)	LYNTRON		6311-4-2-C	4
148	CONNECTOR	MOLEX		09-52-3101	5
149	CONNECTOR (CARD EDGE)	CINCH JONES	71785	252-18-30-160	1
150	SOCKET (14 PIN)	CINCH JONES	71785	14-DIP	15
151	SOCKET (12 PIN)	CINCH JONES	71785	CSA-2300-12	2
152	SWITCH ASSY SW1	WAVETEK	23338	0147-005	1
153	SWITCH ASSY SW2	WAVETEK	23338	0147-008	1
154	SWITCH ASSY SW3	WAVETEK	23338	0147-014	1
155	SWITCH ASSY SW4	WAVETEK	23338	0147-015	1

PARTS LIST

LINE NO	DESCRIPTION	MFGR	FSCM	MFGR P/N	QTY
156	SWITCH ASSY SW5-SW7	WAVETEK	23338	132-401	1
157	TRANSIPADS	MILTON ROSS	07047	10123N	16
158	SWITCH BRACKET	WAVETEK	23338	133-305	2
159	TERMINALS	USECO	88245	20108-1	2
160	CIRCUIT BOARD	WAVETEK	23338	147-123	1

NOTE UNLESS OTHERWISE SPECIFIED

REMOVE ALL BURRS AND BREAK SHARP EDGES	DRAWN Bochicchio	DATE 9/29/78	WAVETEK SAN DIEGO • CALIFORNIA
MATERIAL	ENGINEER		TITLE ASSEMBLY MAIN BOARD
	RELEASE APPROV		
FINISH WAVETEK PROCESS	TOLERANCE UNLESS OTHERWISE SPECIFIED XXX ±.010 XX ±.030 ANGLES ±1		
	DO NOT SCALE DWG		MODEL NO 147 / DWG NO 0147-023 / REV B
	SCALE		CODE IDENT 23338 / SHEET 3 OF 4

REV	ECN	BY	DATE	APP

LINE ITEM REFERENCE LIST

Ref. Desig.	P/L Line
C1	17
C2	17
C3	17
C4	17
C5	16
C6	10
C7	19
C8	19
C9	17
C10	16
C11	16
C12	12
C13	28
C14	16
C15	17
C16	17
C17	27
C18	2
C19	
C20	23
C21	23
C22	16
C23	24
C24	25
C25	26
C26	27
C27	13
C28	6
C29	16
C30	4
C31	16
C32	16
C33	7
C34	15
C35	9
C36	9
C37	15
C38	7
C39	17
C40	11
C41	11
C42	16
C43	16
C44	17
C45	17
C46	8
C47	8
C48	9
C49	4
C50	16
C51	16
C52	17
C53	27
C54	5
C55	17
C56	3
C57	16
C58	16
C59	16
C60	16
C61	17
C62	14
C63	14
C64	14
C65	14
C66	20
C67	22
C68	28
C69	16
C70	20
C71	
C72	20
C73	6
C74	
C75	
C76	20
C77	
C78	16
C79	17
C80	17
C81	17
C82	17
C83	17
C84	9
C85	18
C86	20
C87	28
C88	14
C89	17
C90	17
C91	4

Ref. Desig.	P/L Line
C92	17
C93	21
C94	12 15
C95	21
C96	17
C97	17
C98	17
C99	17
C100	17
C101	17
C102	16
C103	16
CR1	38
CR2	35
CR3	35
CR4	35
CR5	35
CR6	38
CR7	34
CR8	34
CR9	33
CR10	33
CR11	33
CR12	33
CR13	
CR14	36
CR15	36
CR16	35
CR17	35
CR18	33
CR19	33
CR20	33
CR21	33
CR22	37
CR23	37
CR24	35
CR25	35
CR26	38
CR27	35
CR28	35
CR29	35
CR30	35
CR31	35
CR32	35
CR33	35
CR34	35
CR35	35
CR36	35
CR37	35
CR38	35
CR39	35
CR40	35
CR41	35
IC1	51
IC2	52
IC3	52
IC4	39
IC5	46
IC6	51
IC7	52
IC8	48
IC9	46
IC10	47
IC11	52
IC12	47
IC13	51
IC14	
IC15	
IC16	
IC17	43
IC18	42
IC19	43
IC20	43
IC21	43
IC22	43
IC23	43
IC24	43
IC25	43
IC26	43
IC27	43
IC28	43
IC29	44
IC30	45
IC31	50
IC32	47
IC33	49

Ref. Desig.	P/L Line
Q1	62
Q2	69
Q3	65
Q4	68
Q5	67
Q6	64
Q7	66
Q8	64
Q9	62
Q10	70
Q11	70
Q12	67
Q13	59
Q14	65
Q15	65
Q16	67
Q17	68
Q18	67
Q19	69
Q20	65
Q21	57
Q22	67
Q23	57
Q24	57
Q25	67
Q26	57
Q27	67
Q28	60
Q29	60
Q30	67
Q31	67
Q32	65
Q33	67
Q34	67
Q35	65
Q36	65
Q37	67
Q38	63
Q39	63
Q40	63
Q41	63
Q42	63
Q43	63
Q44	63
Q45	61
Q46	61
Q47	61
Q48	61
Q49	61
Q50	61
Q51	61
Q52	61
Q53	63
Q54	63
Q55	63
Q56	61
Q57	65
Q58	64
Q59	62
Q60	65
Q61	65
Q62	58
Q63	58
R1	
R2	
R3	
R4	142
R5	142
R6	142
R7	142
R8	121
R9	144
R10	144
R11	127
R12	128
R13	113
R14	125
R15	112
R16	112
R17	113
R18	97
R19	124

LINE ITEM REFERENCE LIST

Ref. Desig.	P/L Line
R20	141
R21	112
R22	143
R23	140
R24	81
R25	107
R26	99
R27	99
R28	145
R29	117
R30	99
R31	102
R32	99
R33	102
R34	99
R35	
R36	130
R37	98
R38	113
R39	140
R40	85
R41	99
R42	145
R43	144
R44	113
R45	129
R46	107
R47	140
R48	112
R49	81
R50	99
R51	99
R52	99
R53	102
R54	99
R55	130
R56	102
R57	99
R58	118
R59	117
R60	142
R61	95
R62	122
R63	104
R64	120
R65	120
R66	141
R67	81
R68	99
R69	83
R70	100
R71	78
R72	134
R73	134
R74	133
R75	133
R76	132
R77	132
R78	131
R79	131
R80	79
R81	101
R82	85
R83	99
R84	139
R85	85
R86	110
R87	77
R88	77
R89	140
R90	109
R91	79
R92	118
R93	115
R94	91
R95	91
R96	115
R97	118
R98	79
R99	109
R100	140
R101	91
R102	91
R103	101
R104	114
R105	103
R106	79
R107	114
R108	101
R109	79
R110	103

Ref. Desig.	P/L Line
R111	102
R112	99
R113	102
R114	85
R115	85
R116	99
R117	84
R118	89
R119	85
R120	89
R121	100
R122	95
R123	106
R124	89
R125	100
R126	96
R127	96
R128	111
R129	101
R130	90
R131	88
R132	84
R133	85
R134	89
R135	107
R136	103
R137	107
R138	83
R139	140
R140	143
R141	126
R142	80
R143	140
R144	87
R145	1
R146	82
R147	80
R148	98
R149	138
R150	96
R151	96
R152	82
R153	82
R154	80
R155	93
R156	90
R157	81
R158	81
R159	106
R160	80
R161	108
R162	78
R163	78
R164	106
R165	80
R166	79
R167	138
R168	95
R169	85
R170	104
R171	113
R172	99
R173	95
R174	99
R175	141
R176	107
R177	116
R178	102
R179	122
R180	77
R181	77
R182	91
R183	107
R184	141
R185	116
R186	102
R187	122
R188	78
R189	92
R190	107
R191	144
R192	118
R193	118
R194	118
R195	118
R196	86
R197	76
R198	86
R199	86
R200	86
R201	86

Ref. Desig.	P/L Line
R202	86
R203	86
R204	99
R205	99
R206	86
R207	113
R208	113
R209	113
R210	86
R211	86
R212	113
R213	94
R214	113
R215	107
R216	86
R217	118
R218	118
R219	118
R220	113
R221	118
R222	118
R223	118
R224	118
R225	118
R226	118
R227	105
R228	118
R229	118
R230	113
R231	118
R232	123
R233	123
R234	119
R235	140
R236	81
R237	113
R238	118
R239	108
R240	108
R241	113
R242	118
R243	76
R244	113
R245	
R246	128
R247	92
R248	92
R249	102

NOTE UNLESS OTHERWISE SPECIFIED

REMOVE ALL BURRS AND BREAK SHARP EDGES	DRAWN Rochkind	DATE 9/4/84	WAVETEK SAN DIEGO • CALIFORNIA
MATERIAL	ENGINEER		TITLE ASSEMBLY MAIN BOARD
	RELEASE APPROV		
FINISH WAVETEK PROCESS	TOLERANCE UNLESS OTHERWISE SPECIFIED XXX ±.010 XX ±.030 ANGLES ±1°		
	DO NOT SCALE DWG	MODEL NO 147	DWG NO D147-023 REV B
	SCALE	CODE IDENT 23338	SHEET 4 OF 4

REV	ECN	BY	DATE	APP
A	ECN 764			

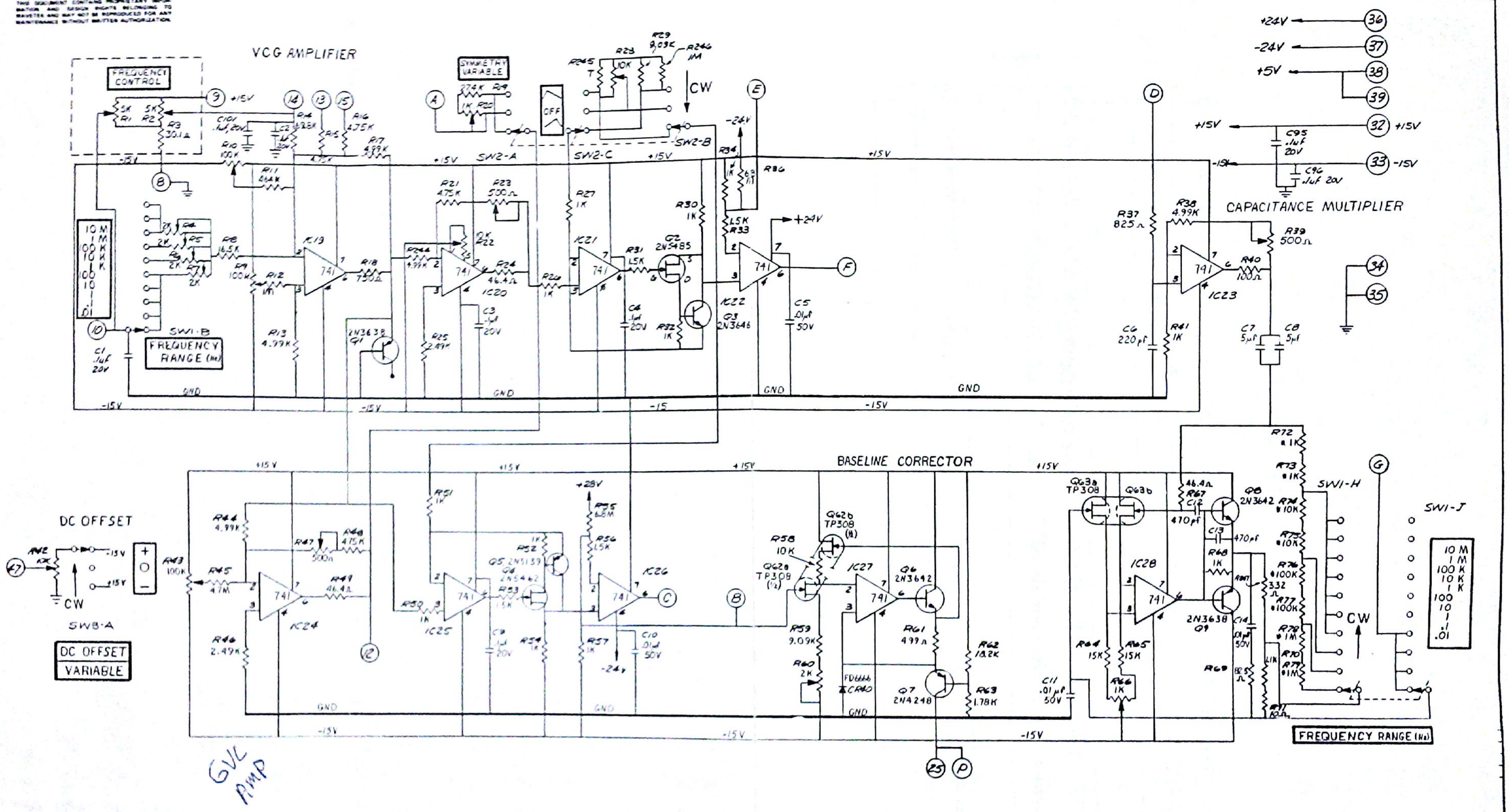

LAST DESIGNATOR USED
R250
C102
Q63
CR39
IC33

NOTE: UNLESS OTHERWISE SPECIFIED

REMOVE ALL BURRS AND BREAK SHARP EDGES	DRAWN CO SHOW	DATE 5-30-73	WAVETEK SAN DIEGO • CALIFORNIA
MATERIAL	PROJENGR		TITLE SCHEMATIC MAIN BOARD
	RELEASE APPROV 9-18-73		
FINISH WAVETEK PROCESS	TOLERANCE UNLESS OTHERWISE SPECIFIED .XXX ±.010 .XX ±.030 ANGLES ±1°		
	DO NOT SCALE DWG		
	SCALE	MODEL NO 147	DWG NO D147-223 REV A
	CODE IDENT 23338	SHEET 1 OF 4	

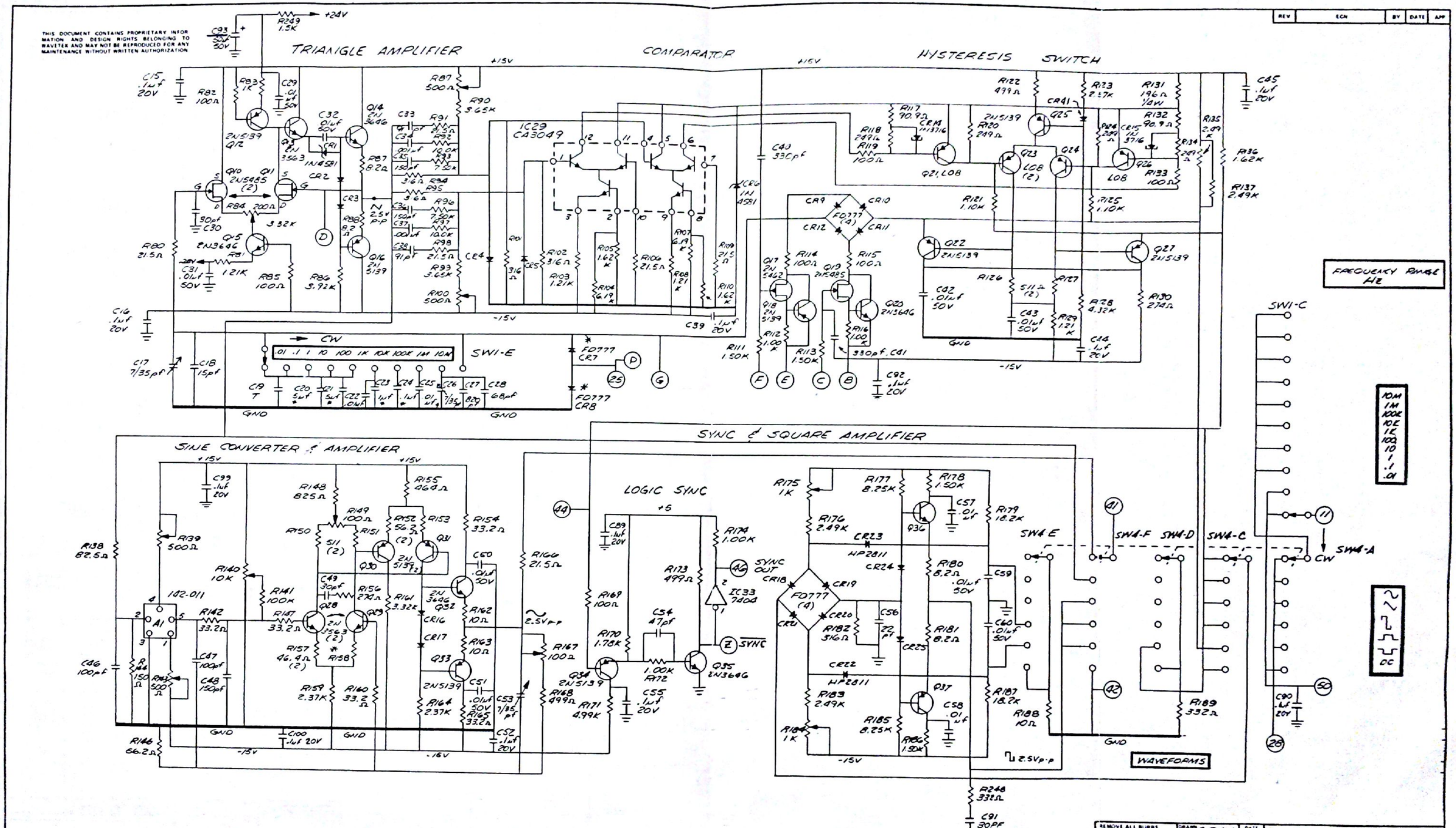

REV	ECN	BY	DATE	APP

REMOVE ALL BURRS AND BREAK SHARP EDGES

MATERIAL

FINISH WAVETEK PROCESS

DRAWN GRAY

DATE

ENGINEER

RELEASE APPROVAL

TOLERANCES UNLESS OTHERWISE SPECIFIED .XXX ±.010 ANGLES ±1° .XX ±.030

DO NOT SCALE DWG

SCALE

WAVETEK SAN DIEGO • CALIFORNIA

TITLE SCHEMATIC MAIN BOARD

MODEL NO. 147

DWG NO. D147-223

REV A

CODE IDENT 23338

SHEET 2 OF 4

NOTE UNLESS OTHERWISE SPECIFIED

REV	ECN	BY	DATE	APP

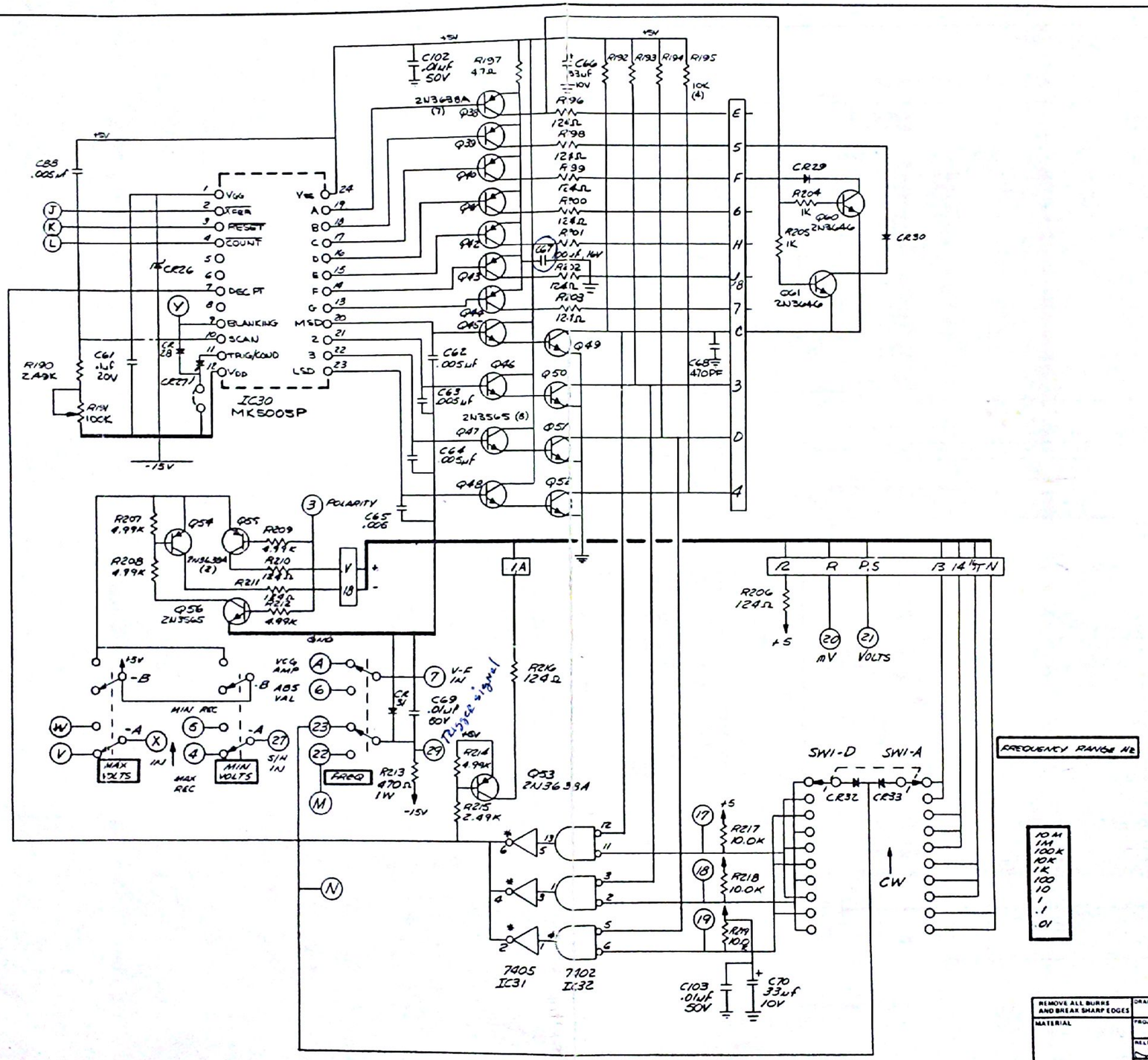

NOTE UNLESS OTHERWISE SPECIFIED

REMOVE ALL BURRS AND BREAK SHARP EDGES	DRAWN	DATE	WAVETEK SAN DIEGO • CALIFORNIA
MATERIAL	PROJ ENGR		TITLE SCHEMATIC MAIN BOARD
FINISH WAVETEK PROCESS	RELEASE APPROV		
	TOLERANCE UNLESS OTHERWISE SPECIFIED .XXX ± .010 .XX ± .030 ANGLES ±1°		
	DO NOT SCALE DWG		
	SCALE		MODEL NO. / DWG NO. D147-223 / REV A
	CODE IDENT 23338		SHEET 3 OF 4

REV	ECN	BY	DATE	APP

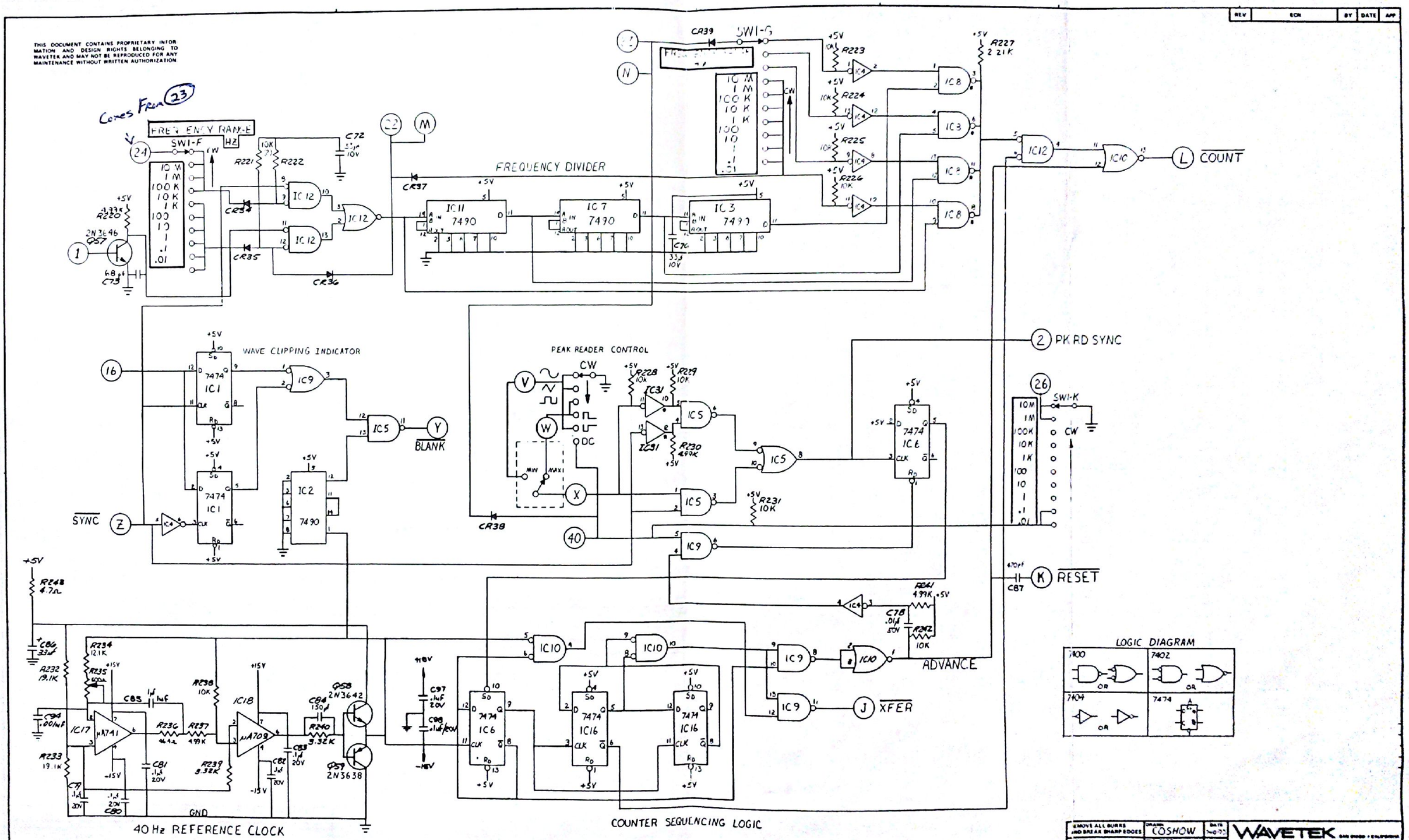

1. ALL DIODES ARE FD6666 UNLESS OTHERWISE SPECIFIED

NOTE UNLESS OTHERWISE SPECIFIED

REMOVE ALL BURRS AND BREAK SHARP EDGES	DRAWN COSHOW	DATE 7-4-75	WAVETEK SAN DIEGO • CALIFORNIA
MATERIAL	PROJ ENGR		TITLE SCHEMATIC MAIN BOARD
FINISH WAVETEK PROCESS	RELEASE APPROV		
	TOLERANCES UNLESS OTHERWISE SPECIFIED .XXX ±.010 .XX ±.030 ANGLES ±1°		
	DO NOT SCALE DWG		MODEL NO. 147 / DWG NO. D147-223 / REV A
	SCALE		CODE IDENT NO. 23338 / SHEET 4 OF 4

REV	ECN	BY	DATE	APP

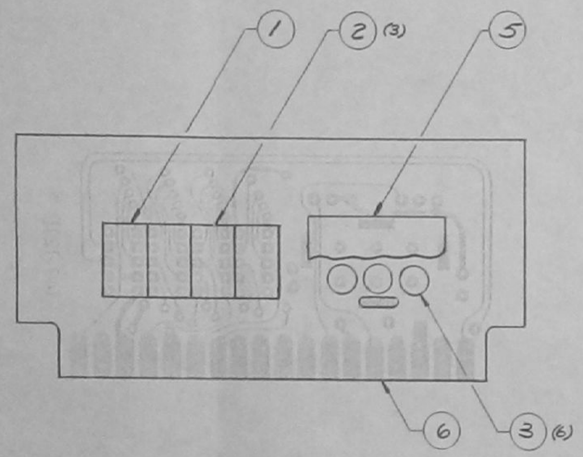

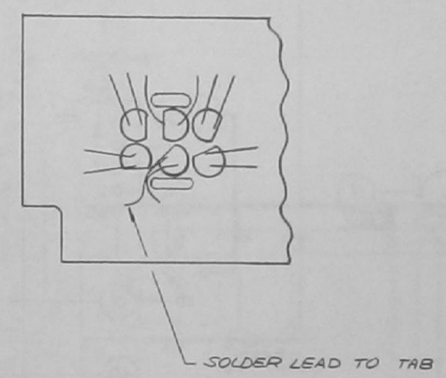

PARTS LIST

ITEM	DESCRIPTION	MFGR	FSCM	MFGR P/N	QTY
1	READOUT +/-	FAIRCHILD	33888	FND-71	1
2	DIGIT	FAIRCHILD	33888	FND-70	3
3	LED	OPCOA		OSL-6L-1	6
4					
5	DISPLAY CAP	WAVETEK	23338	8147-507	1
6	CIRCUIT BOARD	WAVETEK	23338	147-121	1
7					
8					

NOTE: UNLESS OTHERWISE SPECIFIED

REMOVE ALL BURRS AND BREAK SHARP EDGES	DRAWN	DATE	WAVETEK SAN DIEGO • CALIFORNIA
MATERIAL	PROJ ENGR		TITLE ASSEMBLY READOUT BD
	RELEASE APPROV		
FINISH WAVETEK PROCESS	TOLERANCE UNLESS OTHERWISE SPECIFIED XXX ±.010 ANGLES ±1 XX ±.030		
	DO NOT SCALE DWG		MODEL NO. 147 / DWG NO. D147-021 / REV
	SCALE		CODE IDENT 23338 / SHEET 1 OF 1

REV	ECN	BY	DATE	APP

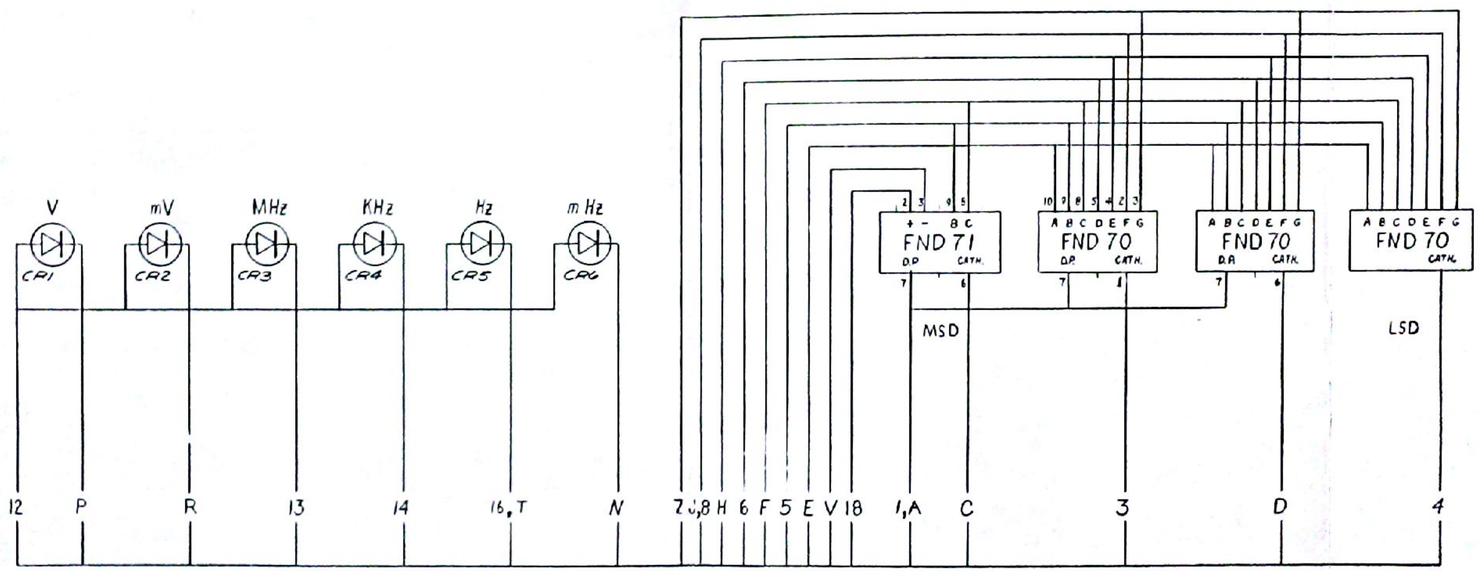

1	2	3	4	5	6	7	8	9	10	11	12	13	14	15	16	17	18
DECIMAL POINTS	2ND MSD MULTIPLEX	LSD MULTIPLEX	B SEGMENT	D SEGMENT	G SEGMENT	F SEGMENT					LED +5	MHz	KHz	Hz	+ INDICATOR		

A	B	C	D	E	F	H	J	K	L	M	N	P	R	S	T	U	V
DECIMAL POINTS	1 MSD MULTIPLEX	3RD MSD MULTIPLEX	A SEGMENT	C SEGMENT	E SEGMENT	F SEGMENT					mHz	VOLTS	mV	Hz	- INDICATOR		

NOTE UNLESS OTHERWISE SPECIFIED

REMOVE ALL BURRS AND BREAK SHARP EDGES	DRAWN COSHOW	DATE 5-31-73	WAVETEK SAN DIEGO • CALIFORNIA
MATERIAL	PROJ ENGR		TITLE SCHEMATIC READOUT BOARD
FINISH WAVETEK PROCESS	RELEASE APPROV 8-22-73	TOLERANCE UNLESS OTHERWISE SPECIFIED .XXX ± .010 .XX ± .030 ANGLES ± 1°	
	DO NOT SCALE DWG		MODEL NO. 147 / DWG NO. D147-221 / REV
	SCALE NONE		CODE IDENT. 23338 / SHEET 1 OF 1

REV	ECN	BY	DATE	APP
C	764			

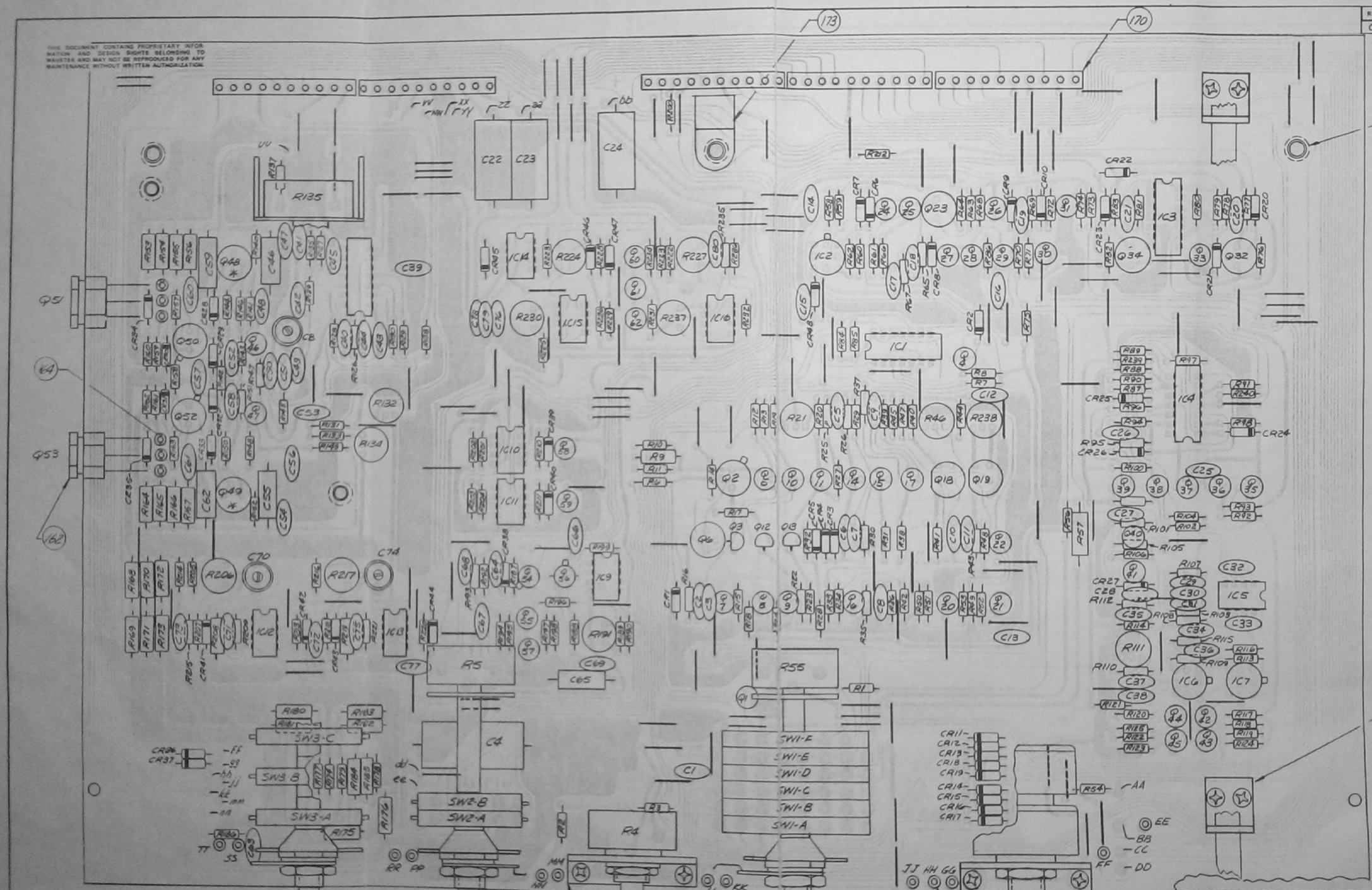

1★ INSTALL HEATSINK ITEM163

NOTE: UNLESS OTHERWISE SPECIFIED

REMOVE ALL BURRS AND BREAK SHARP EDGES

MATERIAL

FINISH WAVETEK PROCESS

DRAWN Bochichio DATE 8/14/73

PROJ ENGR

RELEASE ENGR 8-13-73

TOLERANCE UNLESS OTHERWISE SPECIFIED XXX ± .010 ANGLES ±1° XX ± .030

DO NOT SCALE DWG

SCALE

WAVETEK SAN DIEGO • CALIFORNIA

TITLE ASSEMBLY SWEEP BD

MODEL NO. 147

DWG NO. D147-022 REV C

CODE IDENT 23338

SHEET 1 OF 4

REV	ECN	BY	DATE	APP

LINE ITEM REFERENCE LIST

Ref. Desig.	F/L Line
C1	14
C2	4
C3	4
C4	19
C5	9
C6	15
C7	15
C8	18
C9	9
C10	10
C11	6
C12	18
C13	18
C14	18
C15	18
C16	18
C17	15
C18	11
C19	8
C20	11
C21	11
C22	21
C23	21
C24	21
C25	11
C26	18
C27	13
C28	13
C29	18
C30	18
C31	18
C32	7
C33	4
C34	5
C35	18
C36	18
C37	18
C38	18
C39	18
C40	18
C41	12
C42	12
C43	12
C44	18
C45	12
C46	20
C47	15
C48	15
C49	15
C50	10
C51	13
C52	17
C53	15
C54	15
C55	20
C56	15
C57	15
C58	17
C59	20
C60	15
C61	15
C62	20
C63	7
C64	12
C65	16
C66	18
C67	18
C68	3
C69	18
C70	24
C71	2
C72	15
C73	18
C74	24
C75	2
C76	18
C77	15
C78	18
C79	18
C80	15
C81	24
CR1	31
CR2	30
CR3	31
CR4	30
CR5	30
CR6	30
CR7	30
CR8	30
CR9	30
CR10	30
CR11	30
CR12	30
CR13	30
CR14	30
CR15	30
CR16	30
CR17	30
CR18	30
CR19	30
CR20	30
CR21	30
CR22	28
CR23	28
CR24	31
CR25	31
CR26	31
CR27	30
CR28	30
CR29	30
CR30	30
CR31	30
CR32	30
CR33	30
CR34	30
CR35	30
CR36	30
CR37	30
CR38	30
CR39	30
CR40	30
CR41	29
CR42	29
CR43	29
CR44	29
CR45	30

LINE ITEM REFERENCE LIST

Ref. Desig.	F/L Line
CR46	30
CR47	30
CR48	31
IC1	36
IC2	37
IC3	39
IC4	40
IC5	35
IC6	41
IC7	41
IC8	38
IC9	34
IC10	34
IC11	34
IC12	34
IC13	34
IC14	34
IC15	34
IC16	34
Q1	53
Q2	47
Q3	55
Q4	53
Q5	51
Q6	52
Q7	53
Q8	53
Q9	53
Q10	51
Q11	51
Q12	56
Q13	56
Q14	53
Q15	57
Q16	51
Q17	53
Q18	59
Q19	59
Q20	53
Q21	55
Q22	53
Q23	50
Q24	51
Q25	51
Q26	53
Q27	53
Q28	53
Q29	53
Q30	53
Q31	53
Q32	50
Q33	53
Q34	50
Q35	51
Q36	51
Q37	51
Q38	53
Q39	53
Q40	54
Q41	54
Q42	54
Q43	54
Q44	53
Q45	53
Q46	49
Q47	51
Q48	48
Q49	46
Q50	46
Q51	57
Q52	48
Q53	58
Q54	61
Q55	54
Q56	60
Q57	53
Q58	53
Q59	53
Q60	53
Q61	51
Q62	53
R1	96
R2	85
R3	85
R4	149
R5	144
R6	87
R7	109
R8	109
R9	130
R10	126
R11	112
R12	119
R13	126
R14	91
R15	76
R16	68
R17	94
R18	92
R19	84
R20	84
R21	135
R22	81
R23	81
R24	101
R25	66
R26	76
R27	76
R28	106
R29	76
R30	94
R31	66
R32	94
R33	66
R34	94
R35	76
R36	104

LINE ITEM REFERENCE LIST

Ref. Desig.	F/L Line
R37	108
R38	119
R39	110
R40	104
R41	94
R42	81
R43	94
R44	113
R45	106
R46	135
R47	98
R48	94
R49	94
R50	94
R51	119
R52	119
R53	100
R54	69
R55	143
R56	116
R57	117
R58	93
R59	93
R60	107
R61	93
R62	76
R63	96
R64	76
R65	124
R66	93
R67	101
R68	100
R69	116
R70	116
R71	129
R72	96
R73	116
R74	116
R75	116
R76	119
R77	110
R78	100
R79	96
R80	96
R81	105
R82	119
R83	116
R84	109
R85	109
R86	109
R87	99
R88	99
R89	120
R90	90
R91	102
R92	99
R93	99
R94	116
R95	109
R96	94
R97	94
R98	104
R99	113
R100	108
R101	94
R102	94
R103	111
R104	118
R105	79
R106	106
R107	95
R108	99
R109	88
R110	97
R111	137
R112	99
R113	88
R114	116
R115	99
R116	116
R117	128
R118	108
R119	108
R120	75
R121	111
R122	75
R123	94
R124	118
R125	94
R126	96
R127	96
R128	104
R129	100
R130	100
R131	125
R132	140
R133	104
R134	138
R135	148
R136	90
R137	76
R138	109
R139	86
R140	76
R141	103
R142	116
R143	101
R144	66
R145	76
R146	82
R147	123
R148	103
R149	76
R150	66
R151	103
R152	82
R153	71
R154	71
R155	71
R156	71
R157	72
R158	89
R159	66
R160	67
R161	66
R162	67
R163	72
R164	71
R165	71
R166	71
R167	71
R168	74
R169	74
R170	74
R171	74
R172	74

LINE ITEM REFERENCE LIST

Ref. Desig.	F/L Line
R173	74
R174	71
R175	71
R176	71
R177	83
R178	122
R179	101
R180	76
R181	80
R182	77
R183	77
R184	77
R185	77
R186	67
R187	127
R188	94
R189	121
R190	121
R191	138
R192	94
R193	115
R194	115
R195	115
R196	116
R197	94
R198	115
R199	78
R200	76
R201	113
R202	114
R203	114
R204	115
R205	94
R206	133
R207	94
R208	131
R209	121
R210	115
R211	115
R212	101
R213	70
R214	115
R215	115
R216	94
R217	138
R218	94
R219	131
R220	70
R221	128
R222	115
R223	116
R224	137
R225	102
R226	110
R227	138
R228	109
R229	94
R230	139
R231	109
R232	95
R233	101
R234	116
R235	109
R236	94
R237	139
R238	135
R239	106
R240	106
R241	150
R242	150

NOTE UNLESS OTHERWISE SPECIFIED

REMOVE ALL BURRS AND BREAK SHARP EDGES	DRAWN Rochkuno	DATE 4/4/77	WAVETEK SAN DIEGO • CALIFORNIA
MATERIAL	FINISH		TITLE ASSEMBLY SWEEP BOARD
	RELEASE APPROV		
FINISH WAVETEK PROCESS	TOLERANCE UNLESS OTHERWISE SPECIFIED .XXX ±.010 ANGLES ±1 .XX ±.030		
	DO NOT SCALE DWG	MODEL NO 147	DWG NO D147-022 REV C
	SCALE	CODE IDENT 23338	SHEET 2 OF 2

REV	ECN	BY	DATE	APP
A	764			

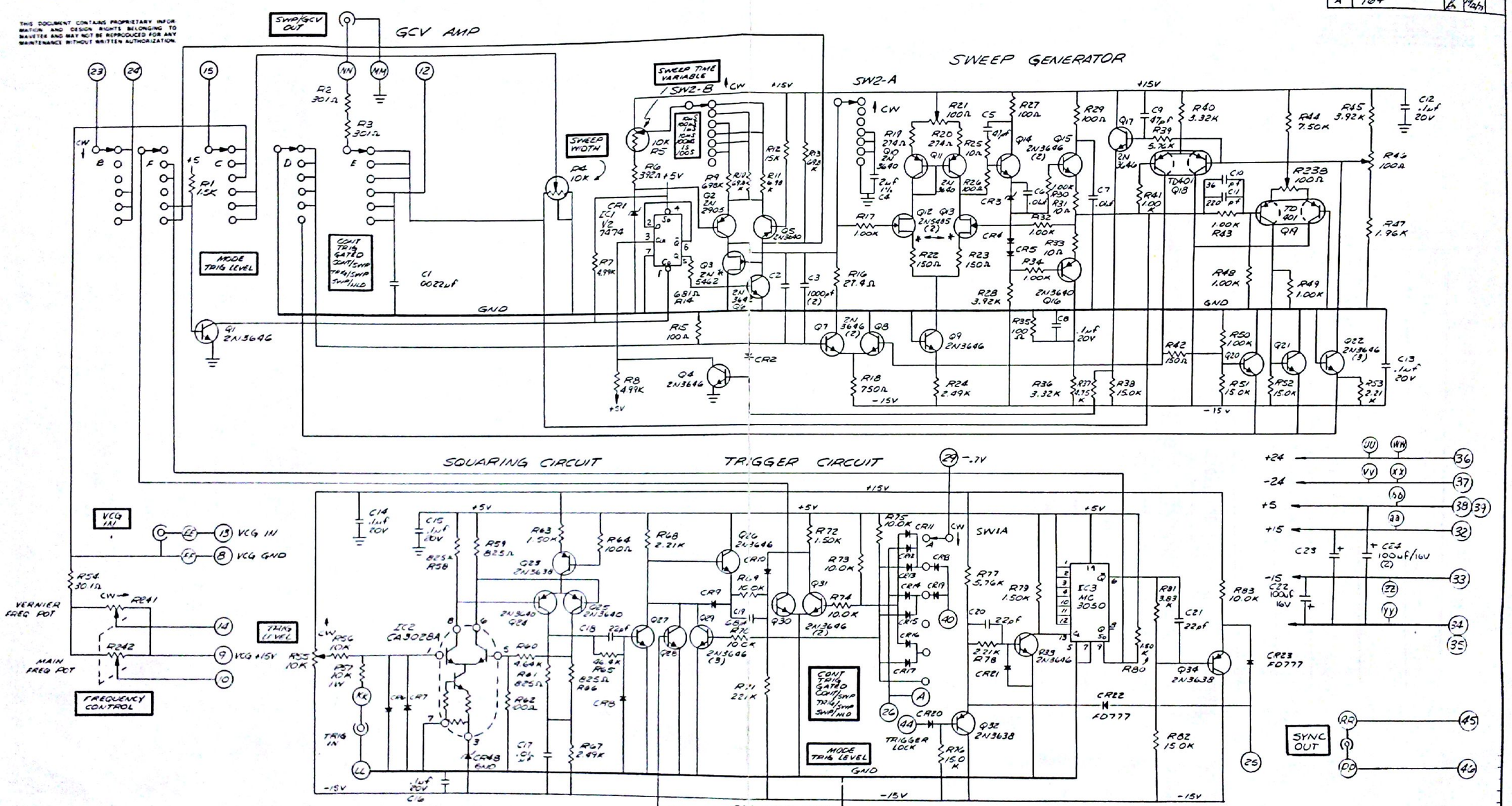

1) RESISTORS ARE 1/8W, 1%, METAL FILM
4) DIODES ARE FD6666
3) LETTERS IN ◯ DENOTE INTERCONNECTIONS BETWEEN SHEETS OF THIS SCHEMATIC
2) NUMBERS IN ◯ DENOTE PIN NO'S ON REAR CONNECTOR (BETWEEN BOARDS)
1) DESCRIPTIONS IN ▭ DENOTE FRONT PANEL NOMENCLATURE

NOTE: UNLESS OTHERWISE SPECIFIED

LAST DESIGNATOR USED

R242
Q62
C81
CR48
IC16

REMOVE ALL BURRS AND BREAK SHARP EDGES	DRAWN GRAY	DATE	WAVETEK SAN DIEGO • CALIFORNIA
MATERIAL	PROJ ENGR		TITLE SCHEMATIC, SWEEP BOARD
	RELEASE APPROV 4-28-70		
FINISH WAVETEK PROCESS	TOLERANCE UNLESS OTHERWISE SPECIFIED XXX ±.010 XX ±.030 ANGLES ±1		
	DO NOT SCALE DWG		MODEL NO 147 / DWG NO D147-222 / REV A
	SCALE		CODE IDENT 23338 / SHEET 1 OF 2

REV	ECN	BY	DATE	APP

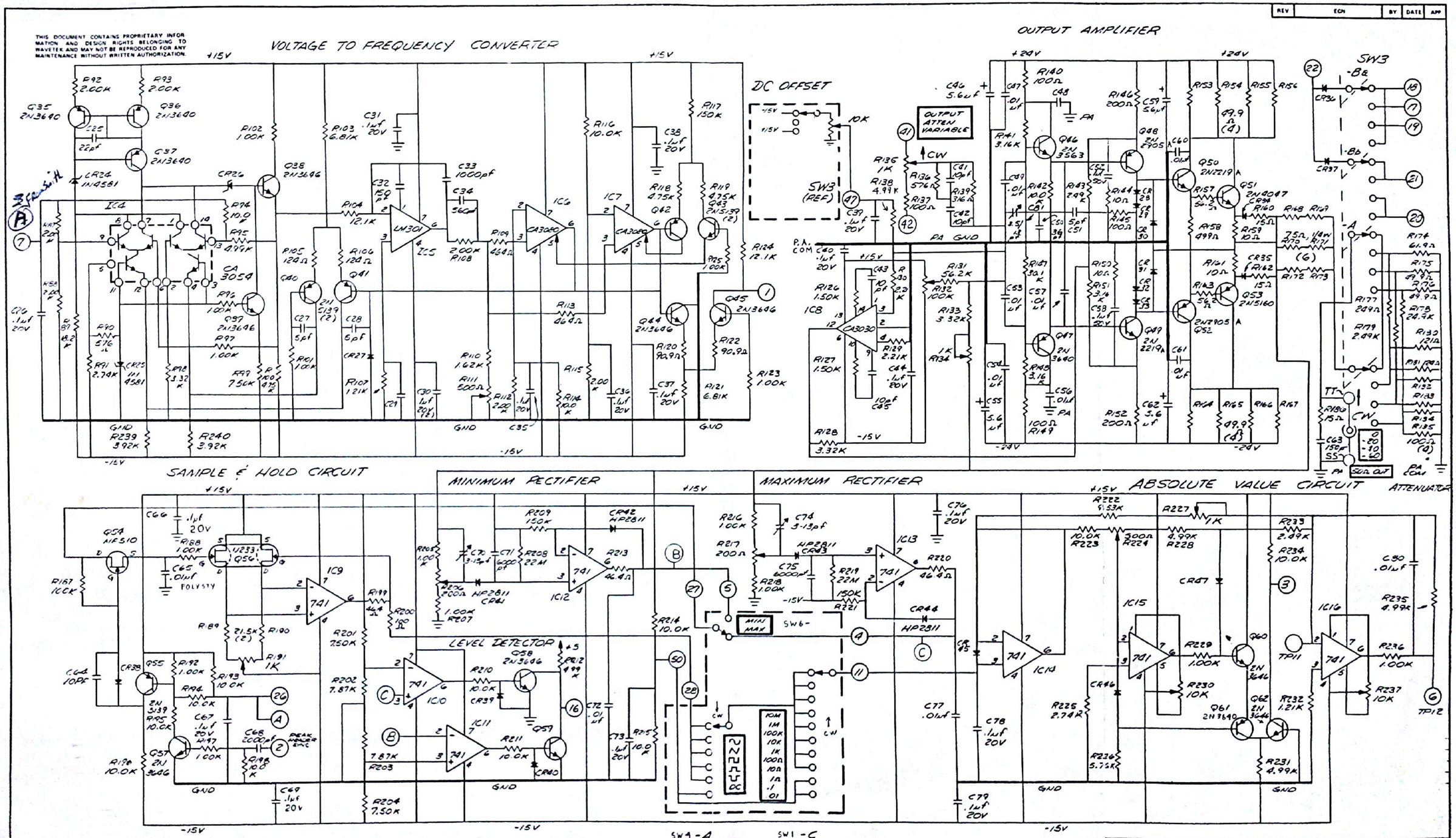

NOTE UNLESS OTHERWISE SPECIFIED

REMOVE ALL BURRS AND BREAK SHARP EDGES	DRAWN GRAY	DATE 8-14-77	WAVETEK SAN DIEGO • CALIFORNIA
MATERIAL	PROJ ENGR		TITLE SCHEMATIC, SWEEP BOARD
	RELEASE APP. SIG. 9-28-77		
FINISH WAVETEK PROCESS	TOLERANCE UNLESS OTHERWISE SPECIFIED XXX ±.010 XX ±.030 ANGLES ±1°		
	DO NOT SCALE DWG		MODEL NO 147 / DWG NO D147-222 / REV A
	SCALE —		CODE IDENT 23338 / SHEET 2 OF 2

REV	ECN	BY	DATE	APP
D	764	BO	11/19	

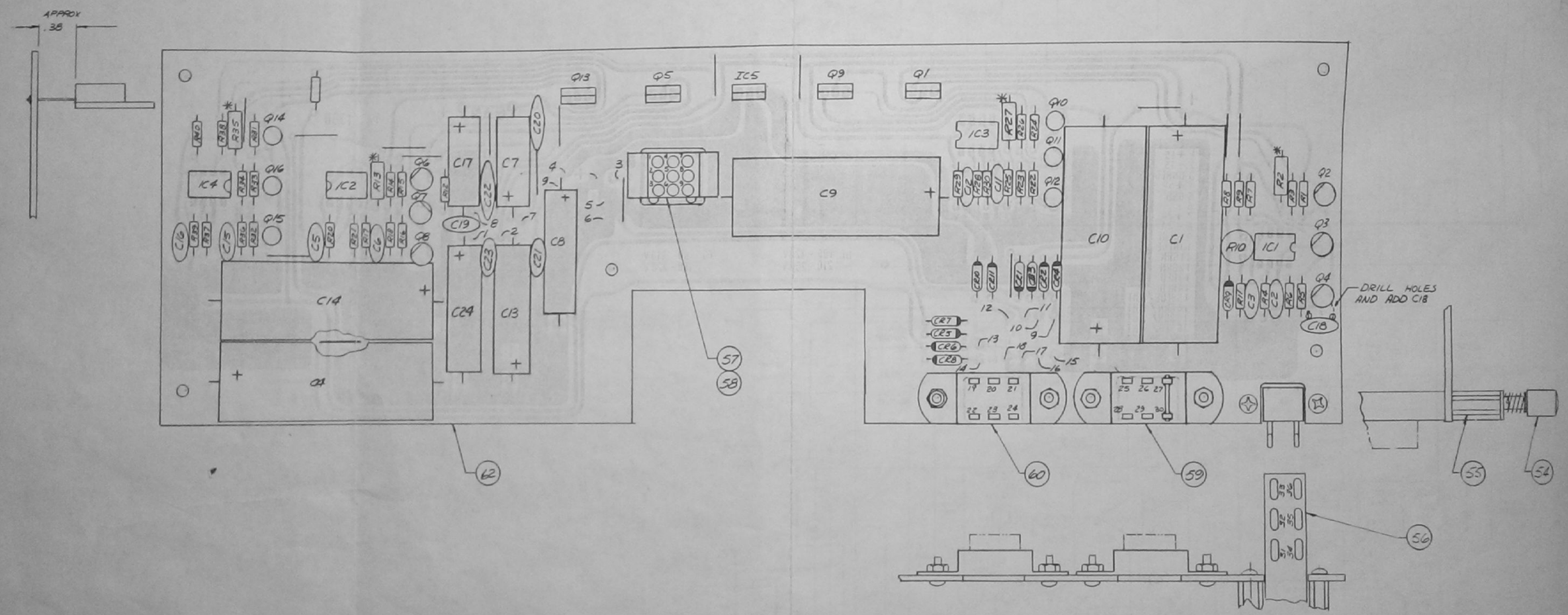

3 * INDICATES RESISTORS MOUNTED OFFBOARD
2 NUMBERS INDICATE CHASSIS WIRING SEE CHASSIS SCHEMATIC D147-200
1

NOTE: UNLESS OTHERWISE SPECIFIED

REMOVE ALL BURRS AND BREAK SHARP EDGES	DRAWN	DATE	WAVETEK SAN DIEGO • CALIFORNIA
MATERIAL	PROJ ENGR		TITLE ASSEMBLY POWER SUPPLY
	RELEASE APPROV	9-28-73	
FINISH WAVETEK PROCESS	TOLERANCE UNLESS OTHERWISE SPECIFIED XXX ±.010 ANGLES ±1° XX ±.030		
	DO NOT SCALE DWG		MODEL NO. 147 / DWG NO. D147-020 / D
	SCALE		CODE IDENT 23338 / SHEET 1 OF 2

REV	ECN	BY	DATE	APP

PARTS LIST

LINE NO	DESCRIPTION	MFGR	FSCM	MFGR P/N	QTY
1	CAPACITOR				
2	SILVER MICA 500V 5% 6000 pf	ELMENCO	72136	DM19-622J	2
3	SILVER MICA 500V 5% 2000 pf	ELMENCO	72136	DM19-202J	1
4	SILVER MICA 500V 1% 1000 pf	ELMENCO	72136	DM19-102F	3
5	SILVER MICA 500V 5% 560 pf	ELMENCO	72136	DM15-561J	1
6	SILVER MICA 500V 5% 220pf	ELMENCO	72136	DM15-221J	1
7	CERAMIC DISC 1000V 150 pf	CRL	71590	DD151	2
8	CERAMIC DISC 1000V 68 pf	CRL	71590	DD680	1
9	CERAMIC DISC 1000V 47 pf	CRL	71590	DD470	2
10	SILVER MICA 500V 5% 36pf	ELMENCO	72136	DM15-360J	2
11	CERAMIC DISC 1000V22pf	CRL	71590	DD220	4
12	CERAMIC DISC 1000V10pf	CRL	71590	DD100	5
13	CERAMIC DISC 1000V5pf	CRL	71590	DD050	3
14	CERAMIC DISC 1000V .0022uf	CRL	71590	DD222	1
15	CERAMIC DISC 50V .01uf	CRL	71590	CK103	15
16	POLYSTYRENE 100V .01uf	IMB	30874	PA2B103F	1
17	CERAMIC DISC 50V .1uf	CRL	71590	CK104	2
18	CERAMIC DISC 20V .1uf	CRL	71590	UK20-104	24
19	MYLAR 10% 200V 2uf	AMERICAN RADIONICS	07994	2MFW2205K	1
20	TANT 35V 5.6uf	SPRAGUE	56289	150D565X9035B2	4
21	ELECTROLYTIC 16V 100uf	SPRAGUE	56289	500D107G016DC7	3
22					
23					
24	VARIABLE 3.5 -15pf	STETNER		75-TRIK0-02	3
25					
26					
27					
28	DIODE FD777	FAIRCHILD	33888	FD777	2
29	DIODE HP2811	HEWLETT PACKARD		HP-2811	4
30	DIODE FD6666	FAIRCHILD	33888	FD6666	36
31	DIODE ZENER	WAVETEK	23338	A130-506	6
32					

PARTS LIST

LINE NO	DESCRIPTION	MFGR	FSCM	MFGR P/N	QTY
33	INTEGRATED CIRCUIT				
34	INTEGRATED CIRCUIT uM741	FAIRCHILD	33888	uM741C	8
35	INTEGRATED CIRCUIT LM301	NATIONAL	27014	LM301AN	1
36	INTEGRATED CIRCUIT 7474	MOTOROLA	04713	7474	1
37	INTEGRATED CIRCUIT CA3028A	RCA	86684	CA3028A	1
38	INTEGRATED CIRCUIT CA3030	RCA	86684	CA3030	1
39	INTEGRATED CIRCUIT MC3050	MOTOROLA	04713	MC-3050	1
40	INTEGRATED CIRCUIT CA3054	RCA	86684	CA3054	1
41	INTEGRATED CIRCUIT CA3080	RCA	86684	CA3080	2
42					
43					
44					
45					
46	TRANSISTOR 2N2219A	MOTOROLA	04713	2N2219A	2
47	TRANSISTOR 2N2905	FAIRCHILD	33888	2N2905	1
48	TRANSISTOR 2N2905A	FAIRCHILD	33888	2N2905A	2
49	TRANSISTOR 2N3563	FAIRCHILD	33888	2N3563	1
50	TRANSISTOR 2N3638	FAIRCHILD	33888	2N3638	3
51	TRANSISTOR 2N3640	FAIRCHILD	33888	2N3640	11
52	TRANSISTOR 2N3642	FAIRCHILD	33888	2N3642	1
53	TRANSISTOR 2N3646	FAIRCHILD	33888	2N3646	27
54	TRANSISTOR 2N5139	FAIRCHILD	33888	2N5139	5
55	TRANSISTOR (-55) 2N5462	MOTOROLA	04713	2N5462	1
56	TRANSISTOR (-53) 2N5485	MOTOROLA	04713	2N5485	2
57	TRANSISTOR 2N4047	FAIRCHILD	33888	2N4047	1
58	TRANSISTOR 2N5160	FAIRCHILD	33888	2N5160	1
59	TRANSISTOR TD401	TECH PRODUCT		TD401	2
60	TRANSISTOR U253	SILICONIX		U253	1
61	TRANSISTOR NF-510	NATIONAL	27014	NF-510	1
62					
63					
64					

PARTS LIST

LINE NO	DESCRIPTION	MFGR	FSCM	MFGR P/N	QTY
65	RESISTORS				
66	METALFILM 1/8W 1% 100	CORNING	16299	RN55D	7
67	METALFILM 1/8W 1% 150	CORNING	16299	RN55D	3
68	METALFILM 1/8W 1% 27.40	CORNING	16299	RN55D	1
69	METALFILM 1/8W 1% 30.10	CORNING	16299	RN55D	1
70	METALFILM 1/8W 1% 46.40	CORNING	16299	RN55D	3
71	METALFILM 1/4W 1% 49.90	CORNING	16299	RN60D	10
72	METALFILM 1/8W 1% 56.20	CORNING	16299	RN55D	2
73	METALFILM 1/8W 1% 61.90	CORNING	16299	RN55D	1
74	METALFILM 1/4W 1% 750	CORNING	16299	RN60D	6
75	METALFILM 1/8W 1% 90.90	CORNING	16299	RN55D	2
76	METALFILM 1/8W 1% 1000	CORNING	16299	RN55D	12
77	METALFILM 1/4W 1% 1000	CORNING	16299	RN60D	4
78	METALFILM 1/4W 1% 1210	CORNING	16299	RN60D	1
79	METALFILM 1/8W 1% 1240	CORNING	16299	RN55D	2
80	METALFILM 1/4W 1% 1240	CORNING	16299	RN60D	1
81	METALFILM 1/8W 1% 1500	CORNING	16299	RN55D	3
82	METALFILM 1/8W 1% 2000	CORNING	16299	RN55D	2
83	METALFILM 1/8W 1% 2490	CORNING	16299	RN55D	1
84	METALFILM 1/8W 1% 2740	CORNING	16299	RN55D	2
85	METALFILM 1/8W 1% 3010	CORNING	16299	RN55D	2
86	METALFILM 1/8W 1% 3160	CORNING	16299	RN55D	1
87	METALFILM 1/8W 1% 3920	CORNING	16299	RN55D	1
88	METALFILM 1/8W 1% 4640	CORNING	16299	RN55D	2
89	METALFILM 1/8W 1% 4990	CORNING	16299	RN55D	1
90	METALFILM 1/8W 1% 5760	CORNING	16299	RN55D	2
91	METALFILM 1/8W 1% 6810	CORNING	16299	RN55D	1
92	METALFILM 1/8W 1% 7500	CORNING	16299	RN55D	1
93	METALFILM 1/8W 1% 8250	CORNING	16299	RN55D	4
94	METALFILM 1/8W 1% 1K	CORNING	16299	RN55D	24
95	METALFILM 1/8W 1% 1.21K	CORNING	16299	RN55D	2
96	METALFILM 1/8W 1% 1.5K	CORNING	16299	RN55D	7

NOTE UNLESS OTHERWISE SPECIFIED

REMOVE ALL BURRS AND BREAK SHARP EDGES

MATERIAL

FINISH WAVETEK PROCESS

DRAWN Bocanegra DATE 9/5/77

ENGINEER

RELEASE APPROV

TOLERANCE UNLESS OTHERWISE SPECIFIED
XXX ±.010 ANGLES ±1
XX ±.030

DO NOT SCALE DWG

SCALE

WAVETEK SAN DIEGO • CALIFORNIA

TITLE ASSEMBLY SWEEP BOARD

MODEL NO 147

DWG NO 0147-022 REV C

CODE IDENT NO 23338

SHEET 2 OF 4

REV	ECN	BY	DATE	APP

PARTS LIST

LINE NO	DESCRIPTION	MFGR	FSCM	MFGR P/N	QTY
97	METALFILM 1/8W 1% 1.62K	CORNING	16299	RN55D	1
98	METALFILM 1/8W 1% 1.96K	CORNING	16299	RN55D	1
99	METALFILM 1/8W 1% 2K	CORNING	16299	RN55D	7
100	METALFILM 1/8W 1% 2.21K	CORNING	16299	RN55D	5
101	METALFILM 1/8W 1% 2.49K	CORNING	16299	RN55D	5
102	METALFILM 1/8W 1% 2.74K	CORNING	16299	RN55D	2
103	METALFILM 1/8W 1% 3.16K	CORNING	16299	RN55D	3
104	METALFILM 1/8W 1% 3.32K	CORNING	16299	RN55D	5
105	METALFILM 1/8W 1% 3.83K	CORNING	16299	RN55D	1
106	METALFILM 1/8W 1% 3.92K	CORNING	16299	RN55D	4
107	METALFILM 1/8W 1% 4.64K	CORNING	16299	RN55D	1
108	METALFILM 1/8W 1% 4.75K	CORNING	16299	RN55D	4
109	METALFILM 1/8W 1% 4.99K	CORNING	16299	RN55D	11
110	METALFILM 1/8W 1% 5.76K	CORNING	16299	RN55D	3
111	METALFILM 1/8W 1% 6.81K	CORNING	6299	RN55D	2
112	METALFILM 1/8W 1% 6.98K	CORNING	16299	RN55D	1
113	METALFILM 1/8W 1% 7.5K	CORNING	16299	RN55D	4
114	METALFILM 1/8W 1% 7.87K	CORNING	16299	RN55D	2
115	METALFILM 1/8W 1% 9.53K	CORNING	16299	RN55D	1
116	METALFILM 1/8W 1% 10K	CORNING	16299	RN55D	22
117	CARBON 1W 5% 10K	STACKPOLE	29604	RC32GF	1
118	METALFILM 1/8W 1% 12.1K	CORNING	16299	RN55D	2
119	METALFILM 1/8W 1% 15K	CORNING	16299	RN55D	6
120	METALFILM 1/8W 1% 18.2K	CORNING	16299	RN55D	1
121	METALFILM 1/8W 1% 21.5K	CORNING	16299	RN55D	2
122	METALFILM 1/8W 1% 24.9K	CORNING	16299	RN55D	1
123	METALFILM 1/8W 1% 30.1K	CORNING	16299	RN55D	1
124	METALFILM 1/8W 1% 46.4K	CORNING	16299	RN55D	1
125	METALFILM 1/8W 1% 56.2K	CORNING	16299	RN55D	1
126	METALFILM 1/8W 1% 69.8K	CORNING	16299	RN55D	2
127	METALFILM 1/8W 1% 100K	CORNING	16299	RN55D	1

PARTS LIST

LINE NO	DESCRIPTION	MFGR	FSCM	MFGR P/N	QTY
128	METALFILM 1/8W 1% 150K	CORNING	16299	RN55D	3
129	METALFILM 1/8W 1% 221K	CORNING	16299	RN55D	1
130	METALFILM 1/4W 1% 698K	CORNING	16299	RN60D	1
131	CARBON 1/2W 5% 22M	STACKPOLE	29604	RC20GF225J	2
132					
133					
134					
135	POTENTIOMETER 100Ω	BECKMAN	80740	91AR100	3
136	POTENTIOMETER 200Ω	BECKMAN	80740	91AR200	2
137	POTENTIOMETER 500Ω	BECKMAN	80740	91AR500	2
138	POTENTIOMETER 1K	BECKMAN	80740	91AR1K	3
139	POTENTIOMETER 10K	BECKMAN	80740	91AR10K	2
140	POTENTIOMETER 100K	BECKMAN	80740	91AR100K	1
141					
142					
143	SWITCH ASSEMBLY (ATTEN)	WAVETEK	23338	D147-004	1
144	SWITCH ASSEMBLY (SWEEP TIME)	WAVETEK	23338	D147-007	1
145	SWITCH ASSEMBLY (MODE)	WAVETEK	23338	D147-006	1
146					
147					
148	POTENTIOMETER	WAVETEK	23338	A147-401	1
149	POTENTIOMETER	WAVETEK	23338	136-R1A	1
150	POTENTIOMETER DUAL	WAVETEK	23338	A147-501	1
151					
152	POWER ROD ASSY	WAVETEK	23338	C147-003	1
153					
154	D-WASHER (RETAINER)	WECKESSER	-	D-191	1
155					
156					
157					
158					

PARTS LIST

LINE NO	DESCRIPTION	MFGR	FSCM	MFGR P/N	QTY
159					
160					
161	SWITCH BRACKET	WAVETEK	23338	B133-305	2
162	HEATSINK	THERMOLLY	13103	1103A	2
163	HEATSINK	WAKEFIELD	05820	NF-207	2
164	THERMINALS (TALL BIF)	USECO	88245	2005B-1	6
165	TRANSIDADS	MILTON ROSS	07047	10123N	7
166	TRANSIDADS (TALL)	MILTON ROSS	07047	10160	2
167	AMP PINS	AMP	00779	61182-2	13
168	STANDOFFS (SWAGE)	LYNTRON		6311-4-2	5
169	SHIELD	WAVETEK	23338	B147-357	1
170	CONNECTOR PINS	MOLEX		09-64-2101	5
171	CONNECTOR PINS	MOLEX		02-06-2132	9
172	CONNECTOR RECEPTACLE	MOLEX		03-06-2091	1
173	CABLE CLAMP	H.H. SMITH	83330	832	1
174	CIRCUIT BOARD	WAVETEK	23338	147-122	1
175					
176					
177					
178					
179					
180					
181					
182					
183					
184					
185					
186					
187					
188					
189					

NOTE UNLESS OTHERWISE SPECIFIED

REMOVE ALL BURRS AND BREAK SHARP EDGES

MATERIAL

FINISH WAVETEK PROCESS

DRAWN Bochikalo DATE 7-24-79

PROJ ENGR

RELEASE APPROV

TOLERANCE UNLESS OTHERWISE SPECIFIED XXX ±.010 ANGLES ±1 XX ±.030

DO NOT SCALE DWG

SCALE

WAVETEK SAN DIEGO • CALIFORNIA

TITLE ASSEMBLY SWEEP BOARD

MODEL NO 147

DWG NO D147-020 REV -

CODE IDENT NO 23338

SHEET 3 OF 6